RQ SERIES

Packaged Rooftop Units, Heat Pumps,
& Outdoor Air Handling Units

Installation, Operation, & Maintenance

UL-1995

⚠ WARNING

FIRE OR EXPLOSION HAZARD

Failure to follow safety warnings exactly could result in serious injury, death or property damage.

Be sure to read and understand the installation, operation and service instructions in this manual.

Improper installation, adjustment, alteration, service or maintenance can cause serious injury, death or property damage.

Keep a copy of this IOM with the unit.

⚠ WARNING

- Do not store gasoline or other flammable vapors and liquids in the vicinity of this or any other appliance
- WHAT TO DO IF YOU SMELL GAS
  - Do not try to light any appliance.
  - Do not touch any electrical switch; do not use any phone in your building.
  - Leave the building immediately.
  - Immediately call your gas supplier from a phone remote from the building. Follow the gas supplier's instructions.
  - If you cannot reach your gas supplier, call the fire department.
- Startup and service must be performed by a Factory Trained Service Technician.

Table of Contents

AAON® RQ Series Features and Options Introduction 7
Safety 8
RQ Series Feature String Nomenclature 14
General Information 22
Codes and Ordinances 22
Receiving Unit 23
Storage 23
Wiring Diagrams 24
Installation 24
Unit Location 24
Setting the Curb 25
Forklifting the Unit 27
Lifting the Unit 28
Vertical Duct Connection 29
Seismic Curb Installation 30
Horizontal Duct Connection 32
Outside Air Rain Hood 32
Metal Mesh Filters 33
Electrical 34
Variable Speed Compressors 36
Thermostat Control Wiring 37
Condensate Drain Piping 37
Draw-Through Coils 38
Non-Compressorized Liquid and Suction Line Piping 38
Startup 41
Filters 41
Supply Fan EC Motor Startup 42
Adjusting Refrigerant Charge 43
Checking Liquid Sub-Cooling 43
Checking Evaporator Superheat 44
Adjusting Sub-cooling and Superheat Temperatures 45
Freeze Stat Startup 48
Condenser Fan EC Motor Startup 48
Adjustable Fan Cycling Switch Procedure 49
Operation 51
Thermostat Operation 51
Packaged DX Cooling Operation and Control 51
Gas Heater Operation 51
Electric Heating Operation 52
Steam or Hot Water Preheating and Heating Operation 52
Modulating Electric Preheat 52
Chilled Water or Non-Compressorized DX Cooling Operation 52
Maintenance 52
Supply Fan 52
DX Cooling 53
Condensate Drain Pans 53

E-Coated Coil Cleaning 54
Microchannel Coil Cleaning 55
Options 57
Heating Coils 57
Chilled Water Coil 57
Packaged Direct Expansion (DX) Units 58
Variable Capacity Compressor Controller 59
Evaporator Coil 61
Condenser Fan 61
Refrigerant-to-Water Heat Exchanger 62
Water-Source Heat Pump Applications 62
Open Loop Applications 62
Freezing Water in the Heat Exchanger 63
Water Piping 64
Energy Recovery Units 66
Energy Recovery Wheel General Cleaning 69
Gas or Electric Heating 75
Electric Preheat 76
Status Display Screens 76
System Setting Screens 77
LED Flash Alarm Codes 78
Operation 79
Gas Heating 79
Piping Sizing Examples 81
Inlet and Manifold Pressures 81
Gas Pressure Regulator & Overpressure Protection Device 82
Piping Supports 82
Additional Gas Piping Considerations 82
Leak Testing 85
Gas Heater Operating Instructions 86
Gas Heating Maintenance 87
Gas Heat Exchanger Removal 88
Phase and Brownout Protection Module 89
Filter Replacement 91
Replacement Parts 92
Appendix A - Heat Exchanger Corrosion Resistance 95
Appendix B - Thermistor Temperature vs. Resistance Values 97
RQ Series Startup Form 98
Maintenance Log 102
Maintenance Log (E-Coated Coil) 103
Literature Change History 104

V03850 · Rev. A · 240423

Index of Tables and Figures

Tables:

Table 1 - Unit Clearances 24
Table 2 - Nameplate Voltage Markings & Tolerances 34
Table 3 – 35 KAIC Fuse Sizing 36
Table 4 – 65 KAIC Fuse Sizing 36
Table 5 - Single Circuited Variable Speed Compressor Frequency Range 37
Table 6 - Control Wiring 37
Table 7 - Draw-Through Drain Trap Dimensions (Metric) 38
Table 8 - Draw-Through Drain Trap Dimensions (Imperial) 38
Table 9 - Acceptable Refrigeration Circuit Values (Metric) 44
Table 10 – Acceptable Refrigeration Circuit Values (Imperial) 44
Table 11 - Acceptable Microchannel Air-Cooled Condenser Coil Liquid Sub-Cooling Values (Metric) 44
Table 12 - Acceptable Microchannel Air-Cooled Condenser Coil Liquid Sub-Cooling Values (Imperial) 45
Table 13 - R-410A Refrigerant Temperature-Pressure Chart (Metric) 46
Table 14 - R-410A Refrigerant Temperature-Pressure Chart (Imperial) 47
Table 15 - EC Condenser Fan Cycling Options 48
Table 16 - Hot Water Coil Connection Sizes 57
Table 17 - Steam Coil Connection Sizes 57
Table 18 - Chilled Water Coil Connection Sizes 58
Table 19 – Min and Max Water Pressures and Temps 58
Table 20 - Demand Signal vs. Compressor Capacity Modulation 60
Table 21 - Glycol Concentration Freezing Points 64
Table 22 - Condenser Water Connections 64
Table 23 – Energy Recovery Wheel Cleaning Frequency 70
Table 24 - Electric and Gas Heating Capacities 75
Table 25 - Auxiliary Electric Heating Capacities 75
Table 26 - Stages of Electric Preheat 77
Table 27: 2-6 ton Gas Connections 80
Table 28 – (**Metric**) Natural Gas Maximum Piping Capacities (m^3/hr) 80
Table 29 – (**Imperial**) Natural Gas Maximum Piping Capacities (ft^3/hr) 80
Table 30 – (**Metric**) Propane (kW) Maximum Piping Capacities 81
Table 31 – (**Imperial**)Propane (kBtu/hr) Maximum Piping Capacities 81
Table 32 - Gas Piping Supports (Metric) 82
Table 33 - Gas Piping Supports (Imperial) 82
Table 34 - RQ Series 2-6 ton Pre Filters 91
Table 35 - RQ Series 2-6 ton Unit Filters 91
Table 36 - RQ Series 2-6 ton Energy Recovery Wheel Filters 91

Figures:

Figure 1 - Lockable Handle 23
Figure 2 - RQ Series Orientation 24
Figure 3 - RQ Cabinet Standard and Power Exhaust Gasket Locations 26
Figure 4 - Forklifting an RQ Series Unit from the Side 27
Figure 5 - Forklifting an RQ Series Unit from the Front 27
Figure 6 - Lifting Details of a 2-6 ton Standard or Power Exhaust Unit 28
Figure 7 - Lifting Details of a 2-6 ton Energy Recovery Wheel Unit 28
Figure 8 - Vertical Duct Connection 29
Figure 9 - Solid Bottom Seismic Curb with Filters 30
Figure 10 - Seismic Solid Bottom Curb without Filters Cross Section 31
Figure 11 - Seismic Solid Bottom Curb without Filters Detail A 31
Figure 12 - Seismic Solid Bottom Curb without Filters Detail B 31
Figure 13 - Seismic Rigid Mount Curb Cross Section 32
Figure 14 - Horizontal duct connections 32
Figure 15 - RQ Series unit Closed Rain Hood 33
Figure 16 - RQ Series unit Open Rain Hood 33
Figure 17 - Rain Hood with Metal Mesh Filter Rack Installation 33
Figure 18 - Unit Base Utility Entry 35
Figure 19 - Back View of Power Switch from Control Compartment 35
Figure 20 - Draw-Through Drain Trap 38
Figure 21 - Post Corner Hole Location 39
Figure 22 - Post Back Hole Location 39
Figure 23 - Post Corner Hole Piping 40
Figure 24 - Post Back Hole Piping 40
Figure 25 - PIN Connectors on EC Supply Fan Motor Electronics 42
Figure 26 - 2-6 ton Supply Fan 53
Figure 27 - RQ Supply Fan Removal Bolts 53
Figure 28 - RQ Supply Fan Removal Slide 53
Figure 29 - Variable Capacity Compressor Controller 59
Figure 30 - Compressor Controller Flash Code Details 60
Figure 31 - Evaporator Coil Access 61
Figure 32 - Removal of a Condenser Fan Assembly 62
Figure 33 - Preheat Controller 76
Figure 34 - RQ Series Gas Heat Exchanger 80
Figure 35 - Example 2-6 ton through the Base Gas Piping Note: RQ units will only contain one Heat Exchanger 84
Figure 36 - Gas Heater Instructions 86
Figure 37 - Gas Heat Exchanger 88
Figure 38 - RQ Series 2-6 ton Standard Filter Layout 92

AAON® RQ Series Features and Options Introduction

Energy Efficiency
- Direct Drive Backward Curved Plenum Supply Fans
- Two-Stage, Variable Capacity and Variable Speed Scroll Compressors
- Airside Economizers
- Factory Installed AAONAIRE® Energy Recovery Wheels
- Double Wall Rigid Polyurethane Foam Panel Construction, R-13 Insulation
- Modulating Natural Gas Heaters
- Modulating/SCR Electric Heaters
- Premium Efficiency Motors
- Variable Speed Supply/ Exhaust Fans
- Air-Source, Water-Source and Geothermal Heat Pumps

Indoor Air Quality
- 100% Outside Air
- Constant Volume Outside Air Control
- Economizer CO_2 Override
- High Efficiency Filtration
- Double Wall Rigid Polyurethane Foam Panel Construction, R-13 Insulation
- Interior Corrosion Protection

Humidity Control
- High Capacity Cooling Coils
- Variable Capacity Compressors
- Factory Installed AAONAIRE Total Energy Recovery Wheels
- Modulating Hot Gas Reheat

Safety
- Burglar Bars
- Freeze Stats
- Hot Water/Steam Preheat Coils
- Electric Preheat
- Phase and Brown Out Protection
- Supply/Return Smoke Detectors
- Supply/Return Firestats

Installation and Maintenance
- Clogged Filter Switch
- Color Coded Wiring Diagram
- Compressors in Isolated Compartment
- Compressor Isolation Valves
- Convenience Outlet
- Direct Drive Supply Fans
- Hinged Access Doors with Lockable Handles
- Magnehelic Gauge
- Service Lights
- Sight Glass

System Integration
- Chilled Water Cooling Coils
- Controls by Others
- Electric/Natural Gas/LP Heating
- Hot Water/Steam Heating Coil
- Non-Compressorized DX Coils
- Water-Cooled Condensers

Environmentally Friendly
- Airside Economizers
- Factory Installed AAONAIRE Energy Recovery Wheels
- R-410A Refrigerant

Extended Life
- 5 Year Compressor Warranty
- 15 Year Aluminized Steel Heat Exchanger Warranty
- 25 Year Stainless Steel Heat Exchanger Warranty
- Interior Corrosion Protection
- Polymer E-Coated Coils - 5 Year Coating Warranty
- Stainless Steel Coil Casing
- Stainless Steel Drain Pans

Safety

Attention must be paid to the following statements:

NOTE - Notes are intended to clarify the unit installation, operation and maintenance.

⚠ **CAUTION** - Caution statements are given to prevent actions that may result in equipment damage, property damage, or personal injury.

⚠ **WARNING** - Warning statements are given to prevent actions that could result in equipment damage, property damage, personal injury or death.

⚠ **DANGER** - Danger statements are given to prevent actions that will result in equipment damage, property damage, severe personal injury or death.

⚠ WARNING

ELECTRIC SHOCK, FIRE OR EXPLOSION HAZARD

Failure to follow safety warnings exactly could result in dangerous operation, serious injury, death or property damage.

Improper servicing could result in dangerous operation, serious injury, death or property damage.

- Before servicing, disconnect all electrical power to the furnace. More than one disconnect may be provided.
- When servicing controls, label all wires prior to disconnecting. Reconnect wires correctly.
- Verify proper operation after servicing. Secure all doors with key-lock or nut and bolt.

⚠ CAUTION

WHAT TO DO IF YOU SMELL GAS

- Do not try to turn on unit.
- Shut off main gas supply.
- Do not touch any electric switch.
- Do not use any phone in the building.
- Never test for gas leaks with an open flame.
- Use a gas detection soap solution and check all gas connections and shut off valves.

⚠ WARNING

Electric shock hazard. Before servicing, shut off all electrical power to the unit, including remote disconnects, to avoid shock hazard or injury from rotating parts. Follow proper Lockout-Tagout procedures.

⚠ WARNING

FIRE, EXPLOSION OR CARBON MONOXIDE POISONING HAZARD

Failure to replace proper controls could result in fire, explosion or carbon monoxide poisoning. Failure to follow safety warnings exactly could result in serious injury, death or property damage. Do not store or use gasoline or other flammable vapors and liquids in the vicinity of this appliance.

⚠ WARNING

CARBON MONOXIDE POISONING HAZARD

Failure to follow instructions could result in severe personal injury or death due to carbon-monoxide poisoning, if combustion products infiltrate into the building.

Check that all openings in the outside wall around the vent (and air intake) pipe(s) are sealed to prevent infiltration of combustion products into the building.

Check that furnance vent (and air intake) terminal(s) are not obstructed in any way during all seasons.

⚠ CAUTION

In order to avoid a hazard due to inadvertent resetting of the THERMAL CUT-OUT, this appliance must not be supplied through an external switching device, such as a timer, or connected to a circuit that is regularly switched on and off by the utility.

⚠ WARNING

ROTATING COMPONENTS

Unit contains fans with moving parts that can cause serious injury. Do not open door containing fans until the power to the unit has been disconnected and fan wheel has stopped rotating.

⚠ WARNING

GROUNDING REQUIRED

All field installed wiring must be completed by qualified personnel. Field installed wiring must comply with NEC/CEC, local and state electrical code requirements. Failure to follow code requirements could result in serious injury or death. Provide proper unit ground in accordance with these code requirements.

⚠ WARNING

This appliance is not intended for use by persons with reduced physical, sensory or mental capabilities, or lack of experience and knowledge, unless they have been given supervision or instruction concerning use of the appliance by a person responsible for their safety. Children must be supervised around this appliance.

⚠ WARNING

During installation, testing, servicing and troubleshooting of the equipment it may be necessary to work with live electrical components. Only a qualified licensed electrician or individual properly trained in handling live electrical components must perform these tasks.

Standard NFPA-70E, an OSHA regulation requiring an Arc Flash Boundary to be field established and marked for identification of where appropriate Personal Protective Equipment (PPE) be worn, must be followed.

⚠ WARNING

VARIABLE FREQUENCY DRIVES

Do not leave VFDs unattended in hand mode or manual bypass. Damage to personnel or equipment can occur if left unattended. When in hand mode or manual bypass mode VFDs will not respond to controls or alarms.

⚠ CAUTION

Electric motor over-current protection and overload protection may be a function of the Variable Frequency Drive to which the motors are wired. Never defeat the VFD motor overload feature. The overload ampere setting must not exceed 115% of the electric motors FLA rating as shown on the motor nameplate.

⚠ WARNING

UNIT HANDLING

To prevent injury or death lifting equipment capacity must exceed unit weight by an adequate safety factor. Always test-lift unit not more than 24 inches high to verify proper center of gravity lift point to avoid unit damage, injury or death.

⚠ CAUTION

Failure to properly drain and vent coils when not in use during freezing temperature may result in coil and equipment damage.

⚠ CAUTION

Rotation must be checked on all MOTORS AND COMPRESSORS of 3 phase units at startup by a qualified service technician. Scroll compressors are directional and can be damaged if rotated in the wrong direction. Compressor rotation must be checked using suction and discharge gauges. Fan motor rotation must be checked for proper operation. Alterations must only be made at the unit power connection

⚠ WARNING

Do not use oxygen, acetylene or air in place of refrigerant and dry nitrogen for leak testing. A violent explosion may result causing injury or death.

⚠ WARNING

WATER PRESSURE

Prior to connection of condensing water supply, verify water pressure is less than maximum pressure shown on unit nameplate. To prevent injury or death due to instantaneous release of high pressure water, relief valves must be field supplied on system water piping.

⚠ WARNING

Always use a pressure regulator, valves and gauges to control incoming pressures when pressure testing a system. Excessive pressure may cause line ruptures, equipment damage or an explosion which may result in injury or death.

⚠ CAUTION

To prevent damage to the unit, do not use acidic chemical coil cleaners. Do not use alkaline chemical coil cleaners with a pH value greater than 8.5, after mixing, without first using an aluminum corrosion inhibitor in the cleaning solution.

⚠ CAUTION

Do not clean DX refrigerant coils with hot water or steam. The use of hot water or steam on refrigerant coils will cause high pressure inside the coil tubing and damage to the coil.

⚠ WARNING

Some chemical coil cleaning compounds are caustic or toxic. Use these substances only in accordance with the manufacturer's usage instructions. Failure to follow instructions may result in equipment damage, injury or death.

⚠ CAUTION

Door compartments containing hazardous voltage or rotating parts are equipped with door latches to allow locks. Door latch are shipped with nut and bolts requiring tooled access. If you do not replace the shipping hardware with a pad lock always re-install the nut & bolt after closing the door.

⚠ CAUTION

Cleaning the cooling tower or condenser water loop with harsh chemicals such as hydrochloric acid (muriatic acid), chlorine or other chlorides, can damage the refrigerant-to-water heat exchanger. Care must be taken to avoid allowing chemicals to enter the refrigerant-to-water heat exchanger. See Appendix A - Heat Exchanger Corrosion Resistance for more information.

⚠ CAUTION

Unit power supply wire must be only copper or aluminum.

WARNING

OPEN LOOP APPLICATIONS

Failure of the condenser as a result of chemical corrosion is excluded from coverage under AAON Inc. warranties and the heat exchanger manufacturer's warranties.

WARNING

WATER FREEZING

Failure of the condenser due to freezing will allow water to enter the refrigerant circuit and will cause extensive damage to the refrigerant circuit components. Any damage to the equipment as a result of water freezing in the condenser is excluded from coverage under AAON warranties and the heat exchanger manufacturer warranties.

WARNING

COMPRESSOR CYCLING

3 MINUTE MINIMUM OFF TIME
To prevent motor overheating compressors must cycle off for a minimum of 3 minutes.

5 MINUTE MINIMUM ON TIME
To maintain the proper oil level compressors must cycle on for a minimum of 5 minutes.

The cycle rate must not exceed 7 starts per hour.

WARNING

Units with VFD driven motors/ compressors have adjustable overload settings. These are set by the AAON factory for the protection of these motors/compressors and must not be adjusted over this factory setpoint or bypassed.

CAUTION

Disconnect power to the unit before servicing UV-C lamps

CAUTION

Doors and panels with access to UV-C lamps, with possible spectral irradiance exceeding 1.7 µW/cm2 are provided with an interlock switch. Do not over-ride.

WARNING

Do not operate UV-C lamps outside of the unit.

WARNING

Units containing UV-C Germicidal lamps should not be operated with damage to the cabinet of the unit. UV-C radiation may, even in small doses, cause harm to the eyes and skin.

1. Startup and service must be performed by a Factory Trained Service Technician.

2. Use only with type of the gas approved for the furnace. Refer to the furnace rating plate.

3. The unit is for outdoor use only. See General Information section for more information.

4. Provide adequate combustion ventilation air to the furnace. If a vent duct extension is used, a class III approved vent is required. See the Locating Units and Gas Heating sections of the Installation section of the manual.

5. Always install and operate furnace within the intended temperature rise range and duct system external static pressure (ESP) as specified on the unit nameplate.

6. The supply and return air ducts must be derived from the same space. It is recommended ducts be provided with access panels to allow inspection for duct tightness. When a down flow duct is used with electric heat, the exhaust duct must be an L shaped duct.

7. Clean furnace, duct and components upon completion of the construction setup. Verify furnace operating conditions including input rate, temperature rise and ESP.

8. Every unit has a unique equipment nameplate with electrical, operational, and unit clearance specifications. Always refer to the unit nameplate for specific ratings unique to the model you have purchased.

9. READ THE ENTIRE INSTALLATION, OPERATION AND MAINTENANCE MANUAL. OTHER IMPORTANT SAFETY PRECAUTIONS ARE PROVIDED THROUGHOUT THIS MANUAL.

10. Keep this manual and all literature safeguarded near or on the unit.

RQ Series Feature String Nomenclature

Model Options : Unit Feature Options

GEN	SIZE	VLT	CONFIG	A1	A2	A3	A4	B1	B2	B3	1A	1B	1C	1D	2	3	4	5A	5B	5C	6A	6B	6C	7	8	9	10	11	12	13	14A	14B	15	16	17	18	19	20	21	22	23
R Q -	**0 0 5 -**	**3 -**	**V -**	**B**	**B**	**0**	1 -	3	3	4 :	A	0	0	0 -	D	0	B -	P	J	C -	0	B	A -	0	D	0	0	0	0	L -	0	0 -	0	0	B	0	0	0	0	0	B

BASE MODEL

SERIES AND GENERATION

RQ

UNIT SIZE

002 = 2 ton Capacity
003 = 3 ton Capacity
004 = 4 ton Capacity
005 = 5 ton Capacity
006 = 6 ton Capacity

VOLTAGE

1 = 230V/1Φ/60Hz
2 = 230V/3Φ/60Hz
3 = 460V/3Φ/60Hz
4 = 575V/3Φ/60Hz
6 = 380V/3Φ/50Hz
8 = 208V/3Φ/60Hz
9 = 208V/1Φ/60Hz

DISCHARGE/RETURN CONFIGURATION AND INTERIOR CORROSION PROTECTION

V = Vertical Discharge and Return
H = Horizontal Discharge and Return
J = Option H + Interior Corrosion Protection
W = Option V + Interior Corrosion Protection
K = Vertical Discharge and Horizontal Return
L = Option K + Interior Corrosion Protection
M = Horizontal Discharge and Vertical Return
N = Option M + Interior Corrosion Protection

Model Option A: COOLING/HEAT PUMP

A1: REFRIGERANT STYLE

0 = Air Handling Unit
B = R-410A - Non-Compressorized DX Air Handling Unit
C = R-410A - Standard Efficiency
E = R-410A Variable Capacity Scroll Compressor - High Efficiency
F = R-410A Variable Capacity Scroll Compressor - Standard Efficiency
G = R-410A Two-Step Compressor - High Efficiency
H = R-410A Two-Step Compressor - Standard Efficiency
K = R-410A Variable Speed Scroll Compressor – High Efficiency

A2: UNIT CONFIGURATION

0 = No Cooling
A = Air-Cooled Cond. + Std Evap. Coil
B = Air-Cooled Cond. + 6 Row Evap. Coil
U = Chilled Water Coil - 4 Row
W = Chilled Water Coil - 6 Row
2 = Non-Compressorized + Std Evap. Coil
4 = Non-Compressorized + 6 Row Evap. Coil
6 = Air-Source Heat Pump
6 (when A1=K) = Zero Degree Cold Climate Air Source Heat Pump
7 = Water-Source/Geothermal Heat Pump

A3: COIL COATING

0 = Standard
1 = Polymer E-Coated Evap. and Cond. Coils
8 = Polymer E-Coated Cond. Coil
9 = Polymer E-Coated Cooling Coil
A = Stainless Steel Evap. Coil Casing + Option 8
D = Stainless Steel Cooling Coil Casing
J = Stainless Steel Evap. Coil Casing + Polymer E-Coated Evap. Coil
K = Stainless Steel Cooling Coil Casing (Evap Only) + Polymer E-Coated Coils (Evap & Cond)

RQ Series Feature String Nomenclature

Model Options : Unit Feature Options

GEN	SIZE	VLT	CONFIG	A1	A2	A3	**A4**	**B1**	**B2**	**B3**	1A	1B	1C	1D	2	3	4	5A	5B	5C	6A	6B	6C	7	8	9	10	11	12	13	14A	14B	15	16	17	18	19	20	21	22	23
R	Q	-	0	0	5	-	3	-	V	-	B	B	0	**1**	-	**3**	**3**	**4**	**:**	A	0	0	0	-	D	0	B	-	P	J	C	-	0	B	A	-	0	D	0	0	0	0	L	-	0	0	-	0	0	B	0	0	0	0	0	B

A4: COOLING/HEAT PUMP STAGING

0 = No Cooling
1 = 1 Stage
2 = 2 Stage
9 = Modulating - Variable Capacity
B = 1 Stage + 1 Stage Auxiliary Heat
C = 2 Stage + 1 Stage Auxiliary Heat
E = Modulating - Lead VCC + 1 Stage Aux. Heat
H = Single Serpentine 8 fpi
J = Half Serpentine 8 fpi
K = Single Serpentine 10 fpi
L = Half Serpentine 10 fpi
M = Single Serpentine 12 fpi
N = Half Serpentine 12 fpi
P = 1 Stage + 2 Stage Auxiliary Heat
Q = 2 Stage + 2 Stage Auxiliary Heat
S = Modulating - Lead VCC + 2 Stage Aux. Heat
U = 1 Stage + 4 Stage Auxiliary Heat
V = 2 Stage + 4 Stage Auxiliary Heat
Y = Modulating - Lead VCC + 4 Stage Aux. Heat

Model Option B: HEATING

B1: HEATING TYPE

0 = No Heating
1 = Electric Heat
2 = Natural Gas Aluminized
3 = Natural Gas Stainless Steel
4 = High Altitude Natural Gas Aluminized
5 = High Altitude Natural Gas Stainless Steel
6 = LP Gas Aluminized
7 = LP Gas Stainless Steel
8 = High Altitude LP Gas Aluminized
9 = High Altitude LP Gas Stainless Steel
C = Steam Distributing Standard
D = Steam Distributing Polymer E-Coated
E = Hot Water Standard
F = Hot Water Polymer E-Coated

B2: HEATING DESIGNATION

0 = No Heating
1 = Heat 1
2 = Heat 2
3 = Heat 3
4 = Heat 4
5 = Heat 5
7 = Heat 7
H = 1 Row Coil
J = 2 Row Coil

B3: HEATING STAGING

0 = No Heating
1 = 1 Stage
2 = 2 Stage
3 = 3 Stage
4 = 4 Stage
9 = Modulating Gas/SCR Electric
A = SCR Electric, 0-10V External Control
B = High Turndown Modulating Gas
H = Single Serpentine 8 fpi
J = Half Serpentine 8 fpi
M = Single Serpentine 12 fpi
N = Half Serpentine 12 fpi

RQ Series Feature String Nomenclature

Model Options : Unit Feature Options

GEN	SIZE	VLT	CONFIG	A1	A2	A3	A4	B1	B2	B3	**1A**	**1B**	**1C**	**1D**	**2**	3	4	5A	5B	5C	6A	6B	6C	7	8	9	10	11	12	13	14A	14B	15	16	17	18	19	20	21	22	23
R	Q	-	0	0	5	-	3	-	V	-	B	B	0	1	-	3	3	4	:	**A**	**0**	**0**	**0**	-	**D**	0	B	-	P	J	C	-	0	B	A	-	0	D	0	0	0	0	L	-	0	0	-	0	0	B	0	0	0	0	0	B

Feature 1: RETURN/OUTSIDE AIR

1A: RETURN/OUTSIDE AIR SECTION

0 = Manually Adjustable OA Opening + RA Opening
A = Economizer
B = Econ + Power Exhaust
F = Low cfm Total Energy Recovery Wheel
G = Low cfm Total ERW + Bypass Damper
H = Low cfm Sensible ERW
J = Low cfm Sensible ERW + Bypass Damper
K = 100% Outside Air - No Return Air Opening
L = Motorized Outside Air Damper + RA Opening
M = Motorized Outside Air Damper - No RA Opening
U = High cfm Total Fixed Plate Energy Recovery
V = High cfm Total Fixed Plate Energy Recovery + Bypass Damper
+ Bypass Damper
5 = 100% Return Air

1B: RETURN/EXHAUST AIR BLOWER CONFIGURATION

0 = Standard - None
A = 1 Blower + Standard Efficiency Motor
C = 1 Blower + Premium Efficiency Motor
E = 1 Blower + Premium Efficiency Motor + 1 VFD
H = 1 Blower + High Efficiency EC Motor
K = Option E + Shaft Grounding

1C: RETURN/EXHAUST AIR BLOWER

0 = Standard - None
A = Blower 10x8 FC PE w/o HW
B = 15” Backward Curved Plenum
C = 18.5” Backward Curved Plenum
J = 15” Backward Curved Plenum - 70% Width
K = 18.5” Backward Curved Plenum - 60% Width
N= 16” Axial Flow

1D: RETURN/EXHAUST AIR BLOWER MOTOR

0 = Standard - None
A = 1/4 hp - 850 rpm
B = 1/2 hp - 1075 rpm
C = 1 hp - 1760 rpm
D = 2 hp - 1760 rpm
N = 1 hp - 1170rpm
W = 3/4 hp - 1760 rpm
Z = 1/6 hp - 825 rpm

Feature 2: OUTSIDE AIR CONTROL

0 = Standard - None
C = Fully Modulating Actuator - Sensible Limit
D = Fully Modulating Actuator - Enthalpy Limit
E = DDC Actuator
P = Fully Mod. Act. - Sensible + CO2 Override
Q = Fully Mod. Act. - Enthalpy + CO2 Override
R = DDC Actuator + CO2 Override
U = 2 Position Actuator
Y = Fault Detection and Diagnostics Controller (FDD) - Sensible Limit
Z = FDD - Enthalpy Limit
1 = FDD Sensible Changeover + CO2 Override
2 = FDD Enthalpy Changeover + CO2 Override

RQ Series Feature String Nomenclature

Model Options : Unit Feature Options

GEN	SIZE	VLT	CONFIG	A1	A2	A3	A4	B1	B2	B3	1A	1B	1C	1D	2	**3**	**4**	**5A**	**5B**	**5C**	**6A**	**6B**	**6C**	**7**	8	9	10	11	12	13	14A	14B	15	16	17	18	19	20	21	22	23
R	Q	-	0	0	5	-	3	-	V	-	B	B	0	1	-	3	3	4	:	A	0	0	0	-	D	**0**	**B**	**-**	**P**	**J**	**C**	**-**	**0**	**B**	**A**	**-**	**O**	D	0	0	0	0	L	-	0	0	-	0	0	B	0	0	0	0	0	B

Feature 3: HEAT OPTIONS

0 = Standard - None
E = Discharge Air Override
K = Auxiliary Heat K
L = Auxiliary Heat L
M = Auxiliary Heat M
N = Auxiliary Heat N

Feature 4: MAINTENANCE OPTIONS

0 = Standard - None
A = Field Wired 115V Outlet
B = Factory Wired 115V Outlet
C = Blower Aux. Contact
D = Remote Start/Stop Terminals
E = Options A + C
F = Options A + D
G = Options B + C
H = Options B + D
J = Options A + C + D
K = Options B + C + D
L = Options C + D

Feature 5: SUPPLY AIR OPTIONS

5A: SUPPLY AIR BLOWER CONFIGURATION

P = 1 Blower + High Efficiency EC Motor
Q = 1 Blower + Inverter 3 Phase Motor + VFD
R = 1 Blower + Single Phase Motor + Speed Control
S = Option Q + Shaft Grounding

5B: SUPPLY AIR BLOWER

J = 18.5” Direct Drive Backward Curved Plenum
K = 18.5” Direct Drive BC Plenum - 60% Width

5C: SUPPLY AIR BLOWER MOTOR

A = 1/4 hp - 850 rpm
B = 1/2 hp - 1075 rpm
C = 1 hp - 1750 rpm
D = 2 hp - 1760 rpm
W = 3/4 hp - 1760 rpm
Z = 1/6 hp - 825 rpm

Feature 6: FILTERS

6A: PRE FILTER

0 = Standard - None
A = 2” Pleated - MERV 8
B = Metal Mesh Outside Air Filter
C = Lint Screen Filter
D = Exhaust Air ERW Filter
E = Option A + B
F = Option A + D
G = Option B + D
H = Option A + B + D

6B: UNIT FILTER

0 = 2” Pleated - MERV 8
A = 2” Pleated - MERV 8
B = 4” Pleated - MERV 8
C = 2” Permanent Filter + Replaceable Media
F = 4” Pleated - MERV 11
G = 4” Pleated - MERV 13
H = 4” Pleated - MERV 14

6C: FILTER OPTIONS

0 = Standard
A = Clogged Filter Switch
B = Magnehelic Gauge
C = Options A + B

Feature 7: REFRIGERATION CONTROL

0 = Standard-Adj Comp. Cooling Lock Out Through Unit Controls
A = 5 Min. Time Delay Relay - Comp. Off
C = Adjustable Fan Cycling
D = Adjustable Lockout
E = Freeze Stats - Each Circuit
G = Options A + C
H = Options A + D
J = Options A + E
N = Options C + D
P = Options C + E
Q = Options D + E
U = Options A + N
V = Options A + C + E
W = Options A + D + E
2 = Options N + E
6 = Options A + N+ E

RQ Series Feature String Nomenclature

Model Options : Unit Feature Options

GEN	SIZE	VLT	CONFIG	A1	A2	A3	A4	B1	B2	B3	1A	1B	1C	1D	2	3	4	5A	5B	5C	6A	6B	6C	7	**8**	**9**	**10**	11	12	13	14A	14B	15	16	17	18	19	20	21	22	23
R	Q	-	0	0	5	-	3	-	V	-	B	B	0	1	-	3	3	4	:	A	0	0	0	-	D	0	B	-	P	J	C	-	0	B	A	-	0	**D**	**0**	**0**	0	0	L	-	0	0	-	0	0	B	0	0	0	0	0	B

Feature 8: REFRIGERATION OPTIONS

0 = Standard
D = Modulating Hot Gas Reheat
E = 0°F Low Ambient Lead Stage
N = Polymer E-Coated Modulating Hot Gas Reheat
1 = Parallel Modulating Hot Gas Reheat Microchannel Coil
4 = Polymer E-Coated Parallel Modulating Hot Gas Reheat Microchannel Coil

Feature 9: REFRIGERATION ACCESSORIES

0 = Standard
A = Sight Glass
B = Compressor Isolation Valves
C = Options A + B
D = ECM Condenser Fan - Multiple Speed
E = ECM Condenser Fan - Head Pressure Control
G = Options A + D
H = Options B + D
J = Options A + B + D
K = Options A + E
L = Options B + E
M = Options A + B + E
N = Low Sound Condenser Fan - Head Pressure Control
P = Options N + A
Q = Options N + B
R = Options N + A + B

Feature 10: POWER OPTIONS

0 = Standard Power Block
A = 100 Amp Power Switch
B = 150 Amp Power Switch
C = 250 Amp Power Switch
D = 400 Amp Power Switch
E = 600 Amp Power Switch
G= Circuit Breaker (15 Amp)
H= Circuit Breaker (20 Amp)
J= Circuit Breaker (25 Amp)
K= Circuit Breaker (30 Amp)
L= Circuit Breaker (35 Amp)
M= Circuit Breaker (40 Amp)
N= Circuit Breaker (45 Amp)
P= Circuit Breaker (50 Amp)
Q= Circuit Breaker (60 Amp)
R= Circuit Breaker (70 Amp)
S= Circuit Breaker (80 Amp)
T= Circuit Breaker (90 Amp)
U= Circuit Breaker (100 Amp)
V= Circuit Breaker (110 Amp)
W= Circuit Breaker (125 Amp)
Y= Circuit Breaker (150 Amp)
Z= Circuit Breaker (175 Amp)
1= Circuit Breaker (200 Amp)
2= Circuit Breaker (225 Amp)
3= Circuit Breaker (250 Amp)

RQ Series Feature String Nomenclature

Model Options : Unit Feature Options

GEN	SIZE	VLT	CONFIG	A1 A2 A3 A4	B1 B2 B3	1A 1B 1C 1D	2 3 4	5A 5B 5C	6A 6B 6C	7 8 9	10 **11** **12** 13	14A 14B	15 16 17 18 19 20 21 22 23
RQ-	005-	3-	V-	BB01-	334	:A000-	D0B-	PJC-	0BA-	0D00	**00**L-	00-	00B00000B

Feature 11: SAFETY OPTIONS

0 = Standard
A = Return and Supply Air Firestat
B = Return Air Smoke Detector
C = Supply Air Smoke Detector
D = Options B + C
E = Options A + B
F = Options A + C
G = Options A + B + C
H = Remote Safety Shutoff Terminals
J = Options A + H
K = Options B + H
L = Options C + H
M = Options B + C + H
N = Options A + B + H
P = Options A + C + H
Q = Options A + B + C + H
R = High Condensate Level Switch
S = Options A + R
T = Options B + R
U = Options C + R
V = Options B + C + R
W = Options H + R
Y = Options A + B + R
Z = Options A + C + R
1 = Options A + B + C + R
2 = Options A + H + R
3 = Options B + H + R
4 = Options C + H + R
5 = Options B + C + H + R
6 = Options A + B + H + R
7 = Options A + C + H + R
8 = Options A + B + C + H + R

Feature 12: CONTROLS

0 = Standard
A = Low Limit Controls
B = Phase and Brown Out Protection
C = Energy Recovery Wheel Defrost
D = Energy Recovery Wheel Rotation Detection
F = Options A + B
G = Options A + C
H = Options A + D
K = Options B + C
L = Options B + D
N = Options C + D
R = Options A + B + C
S = Options A + B + D
U = Options A + C + D
Y = Options B + C + D
3 = Options A + B + C + D

RQ Series Feature String Nomenclature

Model Options : Unit Feature Options

GEN	SIZE	VLT	CONFIG	A1	A2	A3	A4	B1	B2	B3	1A	1B	1C	1D	2	3	4	5A	5B	5C	6A	6B	6C	7	8	9	10	11	12	**13**	**14A**	**14B**	**15**	**16**	**17**	**18**	19	20	21	22	23
R	Q -	0 0 5	- 3	- V	- B	B 0	1 -	3 3	4 :	A 0	0 0	- D	0 B	- P	J C	- 0	B A	- 0	D 0	0 0	0 **L**	**- 0**	**0 -**	**0 0**	**B 0**	0	0	0	0	B										

Feature 13: SPECIAL CONTROLS

0 = Terminal Block
D = VAV Unit Controller - VAV Cool + CV Heat
E = Constant Volume Unit Controller - CV Cool + CV Heat
F = Makeup Air Unit Controller - CV Cool + CV Heat
J = Factory Installed DDC Controls Furnished by Others
K = Factory Installed DDC Controls Furnished by Others with Isolation Relays
L = Terminal Block for Thermostat Control with Isolation Relays
W = Terminal Block for Variable Capacity Compressor Thermostat
Y = Single Zone VAV Heat Pump Unit Controller - VAV Cool + VAV Heat
Z = Constant Volume Heat Pump Unit Controller - CV Cool + CV Heat
1 = Makeup Air Heat Pump Unit Controller - CV Cool + CV Heat
2 = Single Zone VAV Unit Controller VAV Cool + CV Heat
3 = Single Zone VAV Unit Controller VAV Cool + VAV Heat
4 = Field Installed DDC Controls by Others
5 = Field Installed DDC Controls Furnished by Others with Isolation Relays
6 = Factory Installed DDC Controls Furnished by Others with Isolation Relays (SPA)

Feature 14: PREHEAT

14A: PREHEAT CONFIGURATION

0 = Standard - None
A = Steam Distributing Preheat Coil - 1 Row
C = Hot Water Preheat Coil - 1 Row
E = Modulating Electric Preheat
F = Outside Airflow Monitoring Size A
G = Outside Airflow Monitoring Size B
H = Outside Airflow Monitoring Size C

4B: PREHEAT SIZING

0 = Standard – None
A = Single Serpentine 8 fpi
B = Half Serpentine 8 fpi

4B: PREHEAT SIZING (continued)

E = Single Serpentine 12 fpi
F = Half Serpentine 12 fpi
G = 10 kW (7.5 kW @ 208V)
H = 15 kW (11.3 kW @ 208V)
J = 20 kW (15 kW @ 208V)

Feature 15: Glycol Percentage

0 = Standard
A = 20% Propylene Glycol
B = 40% Propylene Glycol
C = Field Adjustable Glycol Percentage
D = Water or No WSHP, Gas Piping to the Valve
E = Field Adjustable Glycol Percentage, Gas Piping to the Valve

Feature 16: INTERIOR CABINET OPTIONS

0 = Standard
B = Control Panel Service Lights
H = UV Lights
J = Compressor Sound Blanket
K = Options B + H
L = Options B + J
M = Options H + J
N = Options B + H + J

Feature 17: EXTERIOR CABINET OPTIONS

0 = Standard
A= Base Insulation
B = Burglar Bars
C = Condenser Coil Screen
D = Options A + B
E = Options A + C
F = Options B + C
G = Options A + B + C

Feature 18: Electrical Rating

0 = Standard - 5 kAIC
1 = 10 kAIC
2 = 35 kAIC

RQ Series Feature String Nomenclature

Model Options : Unit Feature Options

GEN	SIZE	VLT	CONFIG	A1	A2	A3	A4	B1	B2	B3	1A	1B	1C	1D	2	3	4	5A	5B	5C	6A	6B	6C	7	8	9	10	11	12	13	14A	14B	15	16	17	18	**19**	**20**	**21**	**22**	**23**
R	Q -	0	0 5 -	3 -	V -	B	B	0	1 -	3	3	4 :	A	0	0	0 -	D	0	B -	P	J	C -	0	B	A -	0	D	0	0	0	0	L -	0	0 -	0	0	B	0	**0**	**0**	**0**	**0**	**B**

Feature 19: CODE OPTIONS

0 = Standard - ETL U.S.A. Listing.
B = Chicago - Cool + Gas
C = Chicago - Cool + Electric Heat
D = Chicago - Cool Only
E = Chicago - Gas Only
F = Chicago - Electric Heat Only
G = Chicago - No Cool + No Heat
H = ETL U.S.A. + Canada Listing

Feature 20: CRATING

0 = Standard
A = Export Crating
B = Export Crating - No Condenser Section
C = Shrink Wrap
D = Options A + C
E = Options B + C

Feature 21: WATER-COOLED CONDENSER

0 = Standard - None

Feature 22: CONTROL VENDORS

0 = None
V= VCC-X w/ BACnet MSTP
W= VCC-X w/ BACnet MSTP w/ Specials

Feature 23: TYPE

B = Standard - AAON Gray Paint
U = Special Pricing Authorization + Special Paint
X = Special Pricing Authorization + AAON Gray Paint
4 = Standard Paint + 5 Year Parts Only Warranty
9 = Standard Paint + 10 Year Parts Only Warranty

General Information

RQ Series packaged rooftop units, heat pumps and outdoor air handling units have been designed for outdoor installation only. Units are assembled, wired, charged and run tested at the factory.

Startup and service must be performed by a Factory Trained Service Technician.

⚠ WARNING

Improper installation, adjustment, alteration, service or maintenance can cause property damage, personal injury or loss of life. Startup and service must be performed by a Factory Trained Service Technician. A copy of this IOM must be kept with the unit.

⚠ CAUTION

These units must not be used for heating or cooling at any time during any phase of construction. Very low return air temperatures, harmful vapors, and misplacement of the filters will damage the unit and its efficiency.

Certification of Gas Heat Models

a. AAON gas heat exchangers have successfully completed 10,000 burner operation cycles and corrosion resistance as specified per test standard ANSI 21.47. All gas heat exchangers used in AAON appliances are certified for use downstream of evaporator or cooling coils.
b. Certified as a Category III forced air furnace with or without cooling.
c. Certified for outdoor installation only.
d. Certified for installation on a combustible roof with a minimum of 30.5 cm (12”) high curb.

Certification of Steam or Hot Water Heat Models

a. Certified as a forced air heating system with or without cooling.
b. Certified for outdoor installation only.
c. Certified for installation on a combustible roof with a minimum of 30.5 cm (12”) high curb.

Certification of Electric Heat Models

a. Certified as an electric warm air furnace with or without cooling.
b. Certified for outdoor installation only.
c. Certified for installation on a combustible roof with a minimum of 30.5 cm (12”) high curb.

Certification of Cooling Models

a. Certified as a commercial central air conditioner with or without electrically operated compressors.
b. Certified for outdoor installation only.
c. Certified for installation on a combustible roof with a minimum of 30.5 cm (12”) high curb.
d. Certified with refrigerant R-410A coils or with chilled water cooling coils.

Codes and Ordinances

RQ Series units have been tested and certified, by ETL, in accordance with UL Safety Standard 1995 5th Edition/CSA C22.2 No. 236, Safety Standard Z21.47b-2008/CSA 2.3b-2008, and ANSI Safety Standard Z83.8-2006/CSA 2.6-2006.

System must be sized in accordance with the American Society of Heating, Refrigeration and Air Conditioning Engineers Handbook.

Installation of RQ Series units must conform to the ICC standards of the International Mechanical Code, the International Building Code, and local building, plumbing and waste water codes. In the absence of local codes installation must conform to the current (United States) National Fuel Gas Code ANSI-Z223.1/NFPA 54 or the current (Canada) National Fuel & Propane Installation Code CSA B149.1 or B149.2, and Mechanical Refrigeration Code CSA B52. All appliances must be electrically grounded in accordance with local codes, or in the absence of local codes, the current National Electric Code, ANSI/NFPA 70 or the current Canadian Electrical Code CSA C22.1.

⚠ CAUTION

The Clean Air Act of 1990 bans the intentional venting of refrigerant as of July 1, 1992. Approved methods of recovery, recycling or reclaiming must be followed.

⚠ WARNING

Coils and sheet metal surfaces present sharp edges and care must be taken when working with equipment.

⚠ WARNING

Failure to observe the following instructions will result in premature failure of your system and possible voiding of the warranty.

Receiving Unit

When received, check the unit for damage that might have occurred in transit. If damage is found note on the carrier's freight bill. A request for inspection by carrier's agent must be made in writing at once. Check nameplate to ensure the correct model sizes and voltages have been received to match the job requirements.

If repairs must be made to damaged goods, notify the factory before any repair action is taken in order to protect the warranty. Certain equipment alteration, repair, and manipulation of equipment without the manufacturer's consent may void the product warranty. Contact the AAON Warranty Department for assistance with handling damaged goods, repairs, and freight claims: (918) 382-6450.

Note: Upon receipt check shipment for items that ship loose such as filters and remote sensors. Consult order and shipment documentation to identify potential loose-shipped items. Loose-shipped items may have been placed inside unit cabinet for security. Secure all doors with locks or nuts and bolts to prevent unauthorized access.

Figure 1 - Lockable Handle

The warranty card must be completed in full and returned to AAON not more than 3 months after unit is delivered.

Storage

If installation will not occur immediately following delivery, store equipment in a dry

protected area away from construction traffic and in the proper orientation as marked on the packaging with all internal packaging in place. Secure all loose-shipped items.

Wiring Diagrams
Unit specific wiring diagrams are laminated and affixed inside the compressor and control compartment door.

Installation

AAON equipment has been designed for quick and easy installation.

Unit Location
The curb must be mounted first and must be located so that duct connections will be clear of structural members of the building.

Verify rooftop or foundation can support the total unit weight, including accessory weights.

⚠ WARNING

When locating gas fired units, the unit must be installed so that the flue discharge vents are located at least 305 cm (120 inches) away from any opening through which combustion products could enter the building.

⚠ WARNING

Distances from adjacent public walkways, adjacent buildings, operable windows and building openings, must conform to local codes and/or the National Fuel Gas Code, ANSI Z223.1/NFPA 54, or the National Gas & Propane Code, CSA B149.1

Do not position flue opening to discharge into a fresh air intake of any other piece of equipment. Unit must also be installed so that the flow of combustion intake air is not obstructed from reaching the furnace.

Vent opening must not be blocked by snow. A minimum 30.5 cm (12”) curb must be used or the vent outlet must be greater than 30.5 cm (12”) off the ground or roof.

Flue gas is dangerously hot and contains contaminants. The user is responsible for determining if vent gases may degrade building materials.

The National Gas and Propane Installation Code, B149.1 specifies a 1.8 m (6 ft). horizontal vent terminal clearance to gas and electric meters and relief devices.

Local codes may supersede or further place restrictions on vent termination locations.

Table 1 - Unit Clearances

Location	Unit Size
	2-6 tons
Front - (Heat Exchanger)	91.4 cm (36”)
Back - (Outside Air)	91.4 cm (36”)
Left Side	61 cm (24”)
Right Side	122 cm (48”)
Top	Unobstructed

Figure 2 - RQ Series Orientation

Setting the Curb

Make openings in roof decking large enough to allow for duct penetration and workspace only. Do not make openings larger than necessary. Set the curb to coincide with the openings. Make sure the curb is level. Unit must be level in both horizontal axes to support the unit and reduce noise and vibration.

⚠ CAUTION

All roofing work must be performed by competent roofing contractors to avoid any possible leakage.

⚠ CAUTION

Where the supply or warm air duct passes through a combustible roof, a clearance of 2.5 cm (1 inch) must be maintained between the outside edges of the duct and combustible material in accordance with National Fire Protection Association Standard No. 90A. Provide flashings or enclosure between structure and roof and all joints must be sealed with mastic roofing to ensure a watertight seal.

Be careful to install the provided neoprene isolator according to Figure 3 prior to setting the unit on the curb.

⚠ CAUTION

Neoprene isolator for unit vibration isolation is provided in the cabinet and must be installed according to installation manual.

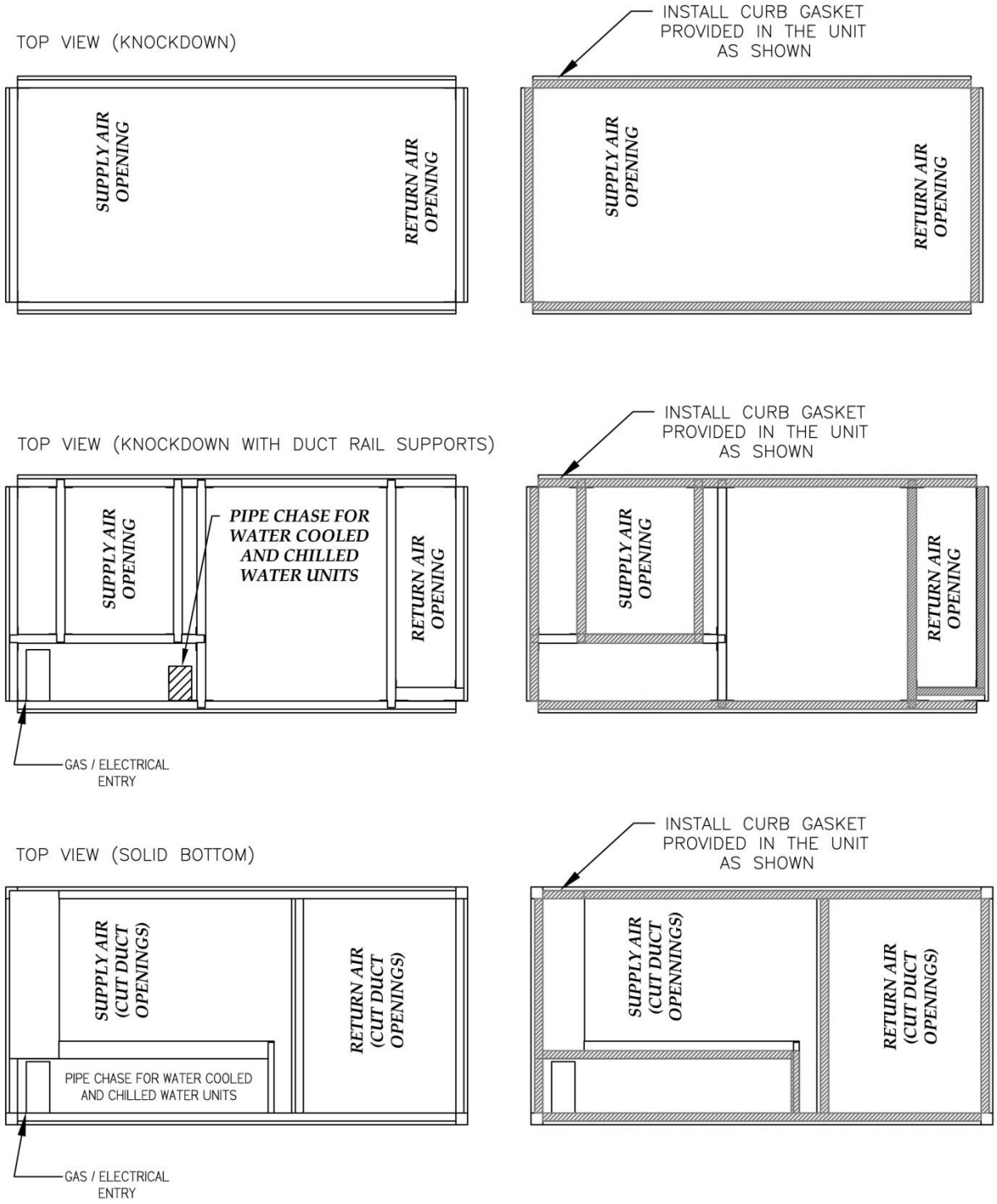

Figure 3 - RQ Cabinet Standard and Power Exhaust Gasket Locations

⚠ CAUTION

Improper lifting can cause damage to the unit.

Forklifting the Unit

Units can be lifted using a forklift. Forks must be 122 cm (48”) in length. Standard units can be lifted from all sides except the outside air side. Units with energy recovery wheels can only be fork lifted from the left or right side.

Forks must be perpendicular to unit. When lifting from either side, the forks must extend through to the opposite side of the unit. When lifting from the end of the unit, the forks must extend at least 112 cm (44”) under the unit. When lifting with 122 (48”) forks, the back of the fork must be no more than 4” from the unit.

⚠ CAUTION

FORKLIFTING
2-6 TON UNITS

Forks or Fork Extensions must be at least 122 cm (48”) in length and must extend 112 cm (44”) under the unit.

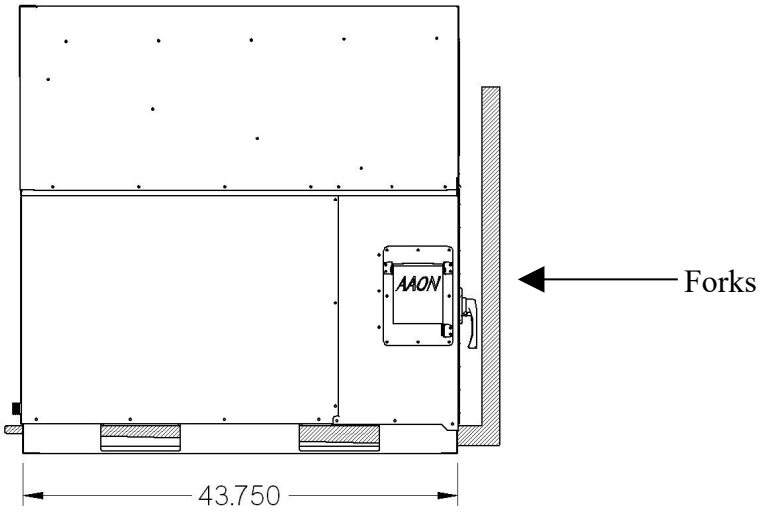

Figure 4 - Forklifting an RQ Series Unit from the Side

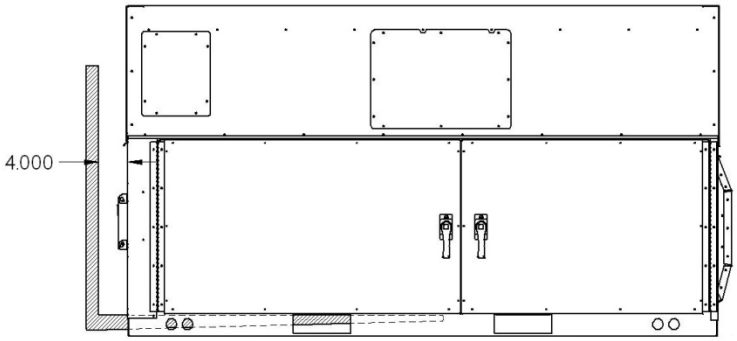

Figure 5 - Forklifting an RQ Series Unit from the Front

Lifting the Unit

The RQ Series units must be lifted using the lifting points in the side base rails. A spreader bar must be used to prevent the lifting straps from damaging the unit. The connection points on the spreader bar must be 122 cm – 152 cm (48”-60”) apart. The minimum cable length used to lift a standard length (208 cm [82”] base length) is 183 cm (72”). The minimum cable length to lift energy recovery units (295 cm [116”] base length) is 244 cm (96”). The shackles used to connect the cables to the lifting points in the base must be 1.3 cm (1/2”) nominal size.

The rigging must be adjusted to lift the unit level. Lifting the unit off-balance may cause severe damage.

It is recommended to lift the unit with the outside air hood in the downward shipping position. However, the unit may be lifted with the outside air hood in the open position.

Before lifting unit, be sure that all shipping material has been removed from unit. Secure hooks and cables at all lifting points provided on the unit.

Hoist unit to a point directly above the curb and duct openings. Be sure that the gasket material has been applied to curb.

Carefully lower and align the unit with utility and duct openings. Lower the unit until the unit skirt fits around the curb. Some units are designed to overhang the curb. Take care that any recessed base rails fit around the curb. Make sure the unit is properly seated on the curb and is level.

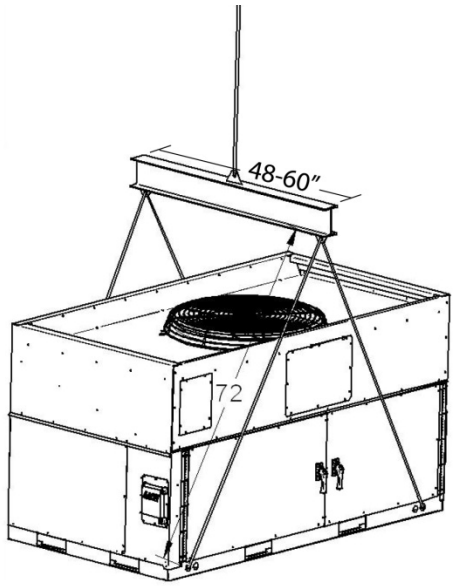

Figure 6 - Lifting Details of a 2-6 ton Standard or Power Exhaust Unit

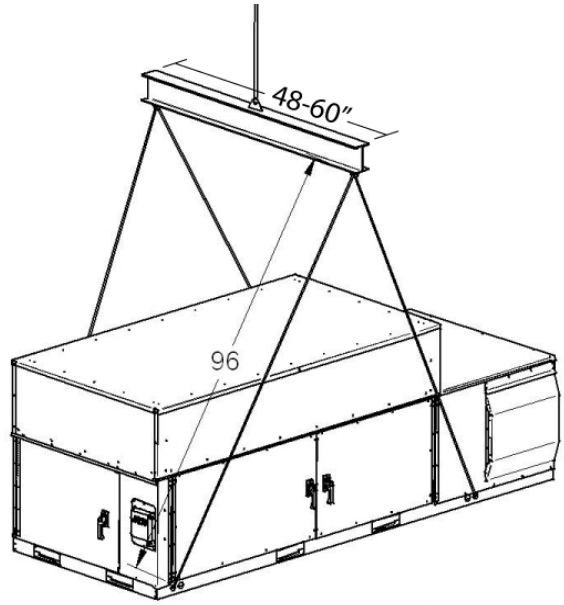

Figure 7 - Lifting Details of a 2-6 ton Energy Recovery Wheel Unit

Vertical Duct Connection

Note: If outside air will be in contact with the air tunnel base the unit must include the base insulation option or the base must be field insulated.

⚠ CAUTION

Do not drill or punch holes in the base of the unit, from inside the unit or from below the unit to attach ductwork. Leaking may occur if unit base is punctured.

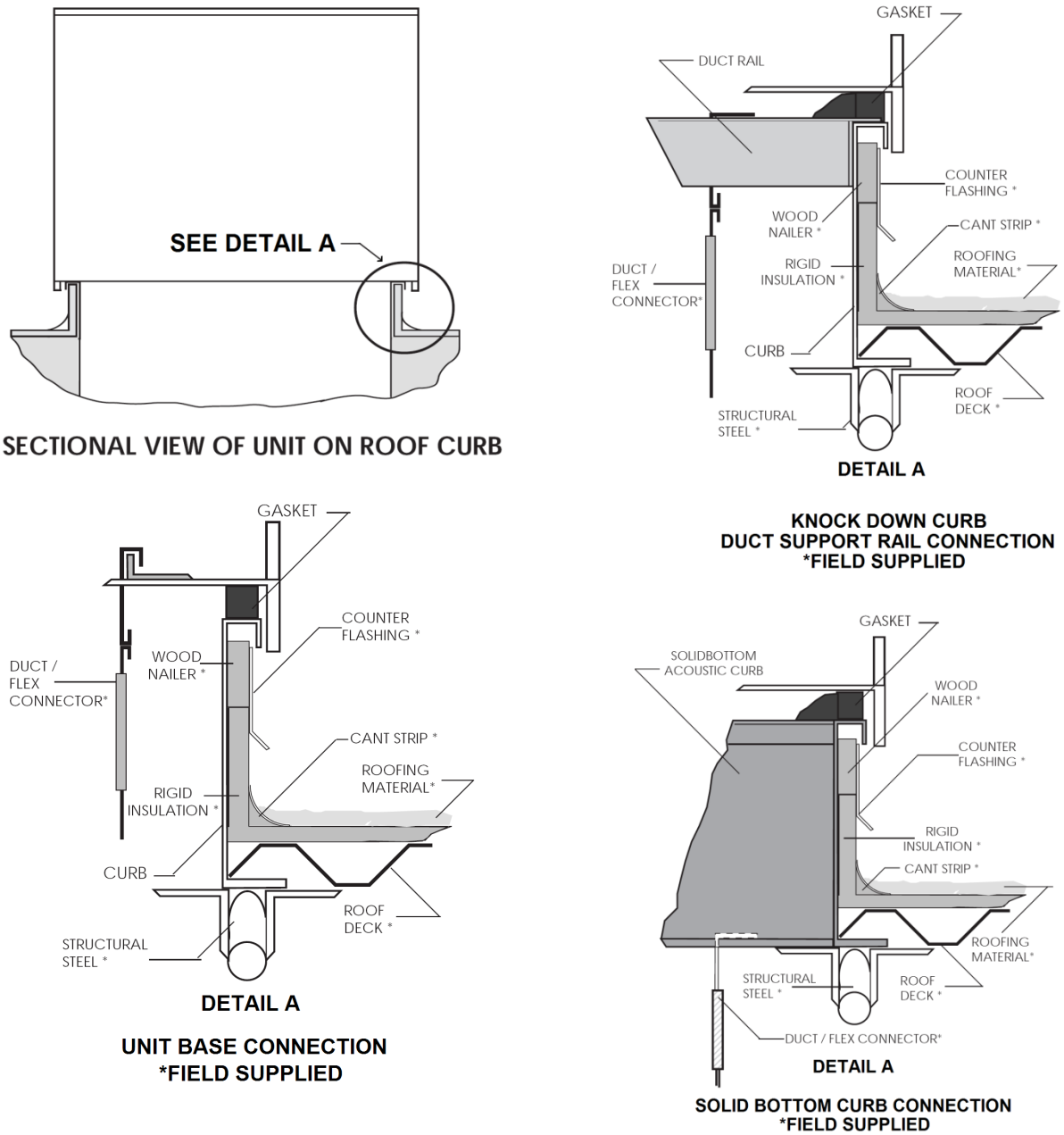

Figure 8 - Vertical Duct Connection

Seismic Curb Installation

Using a standard curb with a seismic unit will void the certification of the unit. All mounting details listed must be followed to achieve seismic certification. The AAON unit must be certified to ICC-ES AC156 when using a seismic curb for seismic certifications to apply. Any deviations or modifications to the unit or curb will void all seismic certification.

Structural engineer of record must approve building anchorage to unit or curb in compliance with OSP-0180-10. Use provided self tapping screws to attach base of unit to seismic curb bracket.

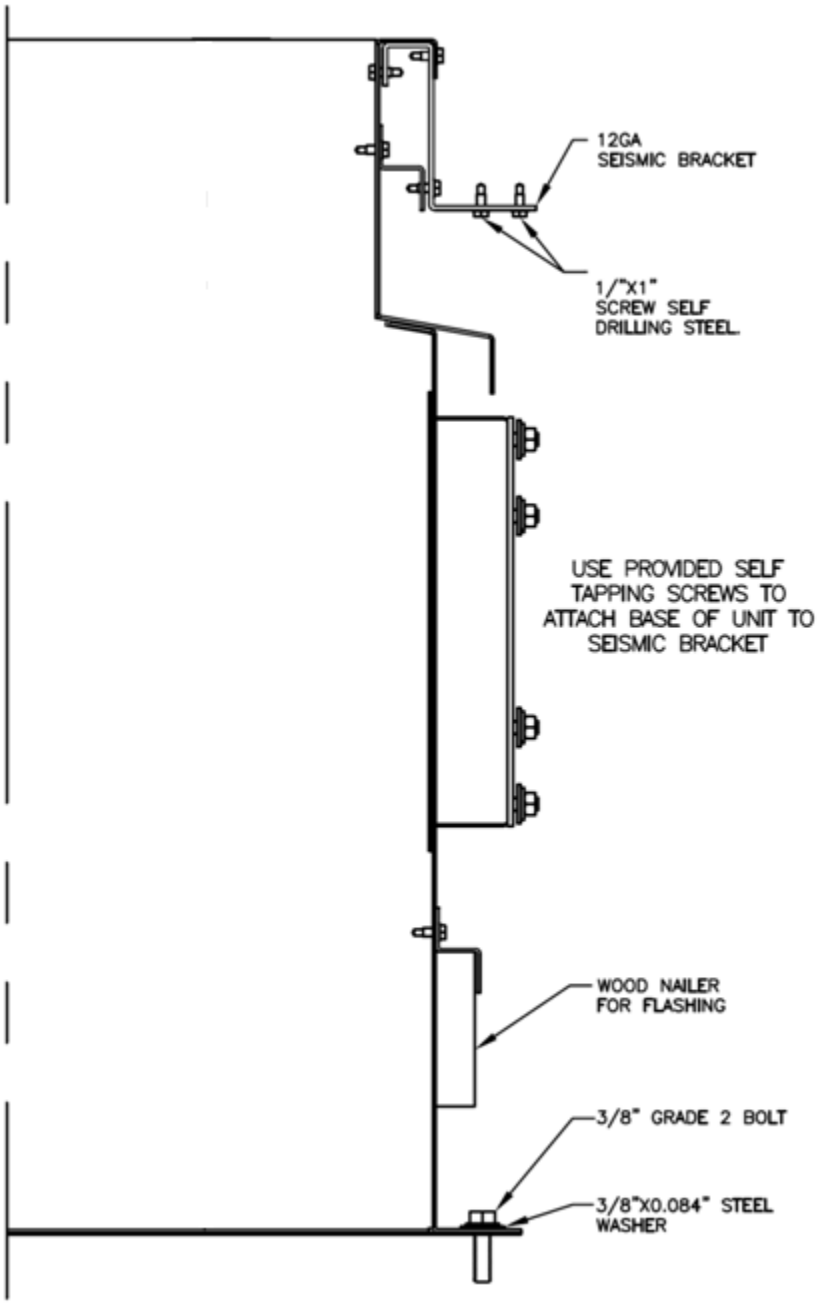

Figure 9 - Solid Bottom Seismic Curb with Filters

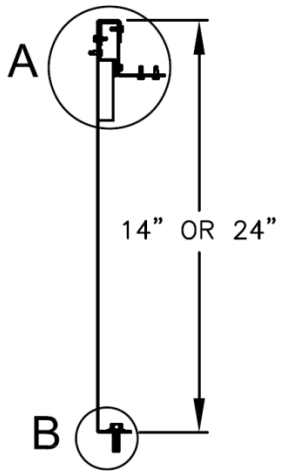

Figure 10 - Seismic Solid Bottom Curb without Filters Cross Section

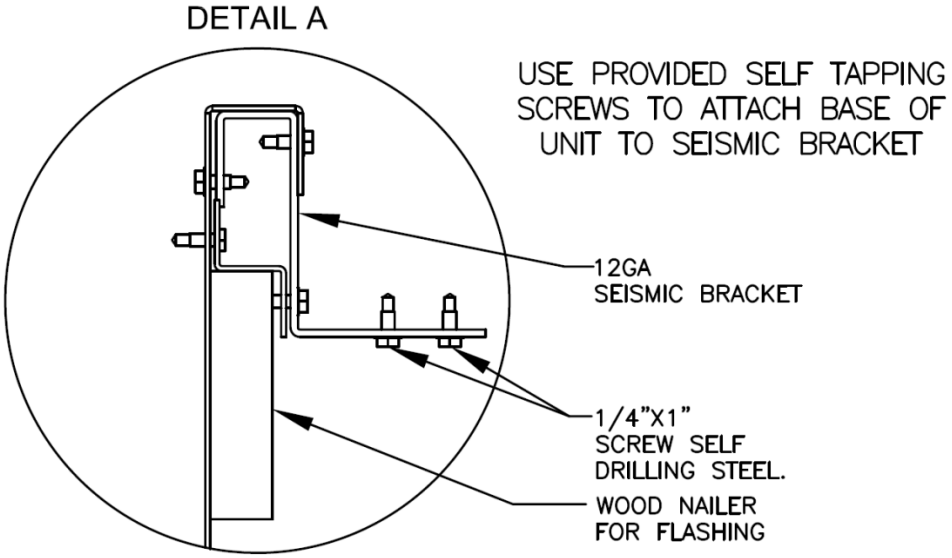

Figure 11 - Seismic Solid Bottom Curb without Filters Detail A

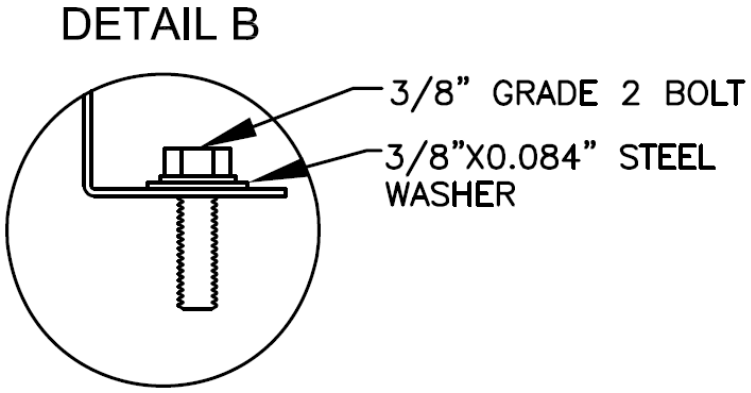

Figure 12 - Seismic Solid Bottom Curb without Filters Detail B

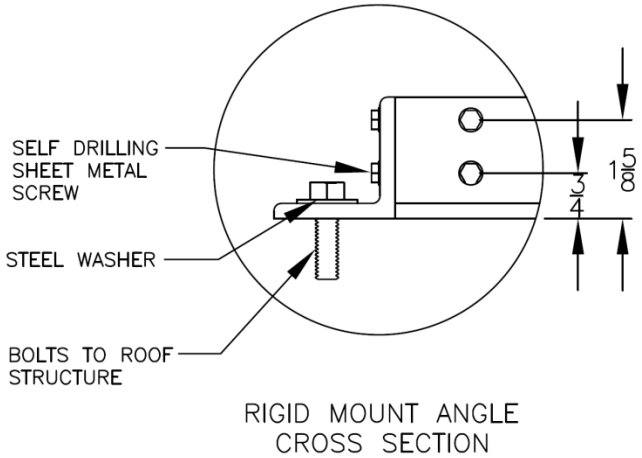

Figure 13 - Seismic Rigid Mount Curb Cross Section

Horizontal Duct Connection

Note: If outside air will be in contact with the air tunnel base the unit must include the base insulation option or the base must be field insulated.

Remove shipping covers and attach duct to flanges provided on the unit. The installer is responsible for sealing ducts to the flanges to prevent water leaks.

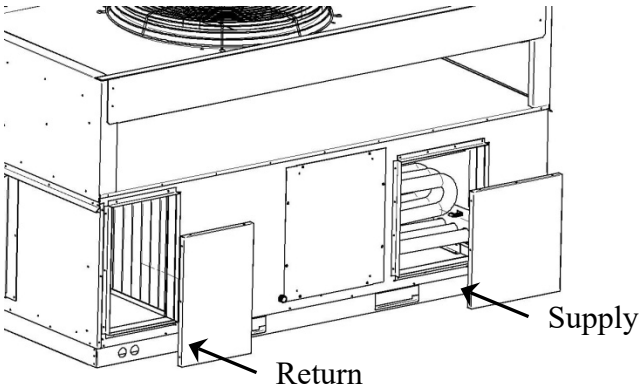

Figure 14 - Horizontal duct connections

Outside Air Rain Hood

Rain hood must be opened before startup of the unit. Fresh air intake adjustments must be made according to building ventilation or local code requirements.

Remove the two screws at the bottom of the rain hood that secure it in the shipping position. Remove the screws that attach the side pieces of the hood to the top of the hood.

Rotate the side pieces so that the holes along one edge line up with the holes on the top piece and the flange is on the inside of the rain hood.

Attach the side pieces to the top of the hood using the provided screws and attached the side pieces to the end of the unit through the flange.

Apply silicon caulking along the top and both sides of the rain hood. Take care to seal the top corners where the rain hood attaches to the unit.

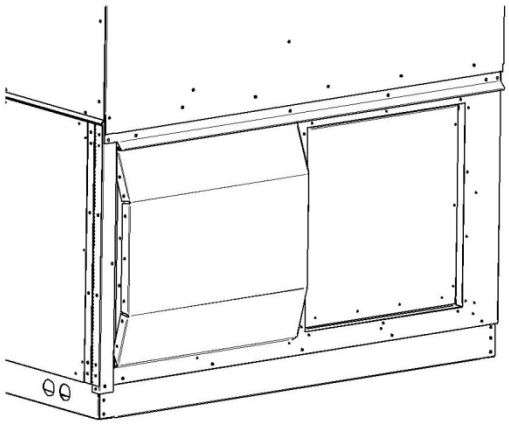

Figure 15 - RQ Series unit Closed Rain Hood

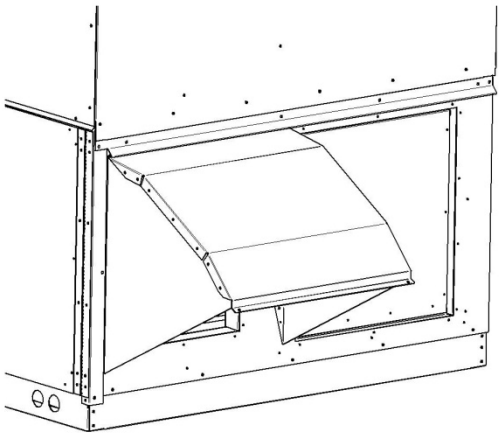

Figure 16 - RQ Series unit Open Rain Hood

Metal Mesh Filters

Metal mesh outside air filters require installation of the filter rack on the intake of the rain hood.

Clips that hold the metal mesh filters in the filter rack must face outward.

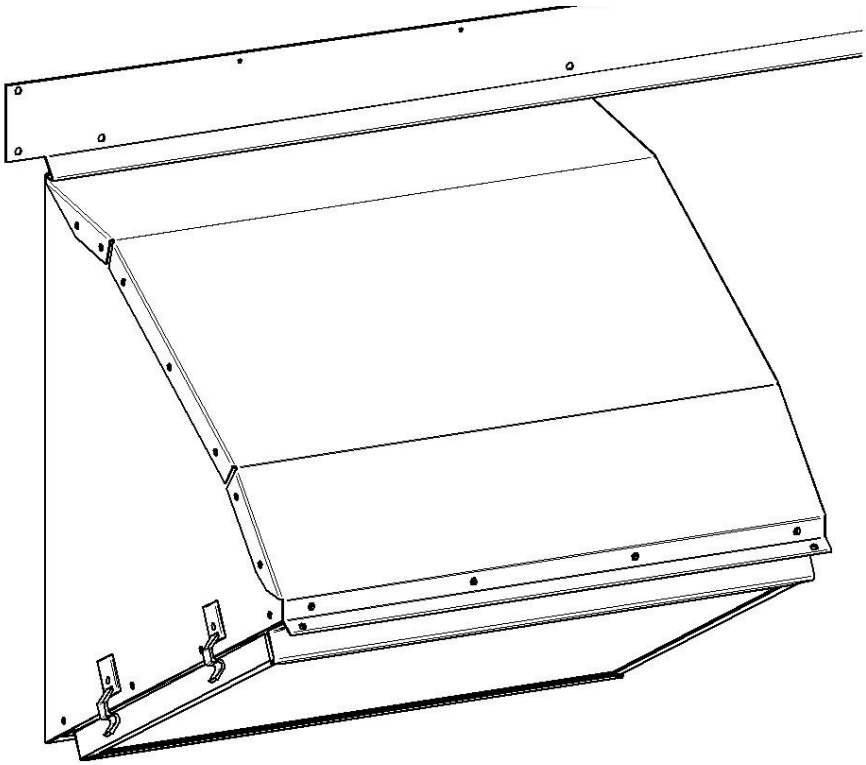

Figure 17 - Rain Hood with Metal Mesh Filter Rack Installation

Electrical

For units not equipped with incoming power disconnect, means for all pole disconnection must be provided in the fixed wiring in accordance with local or national electrical codes. Verify the unit nameplate agrees with power supply. Connect power and control wiring to the unit as shown in Figure 19 and in the unit specific wiring diagram, which shows factory and field wiring and is attached to the inside of the door of the control compartment.

Table 2 - Nameplate Voltage Markings & Tolerances

Hz	Nameplate Voltage	Nominal System Voltage	Operating Voltage Range [1]		Acceptable Performance Range[2]	
			Min	Max	Min	Max
60	115	120	104	127	108	126
	208/230	208/240	187	254	187	252
	208	208	187	228	187	228
	230	240	208	254	216	252
	265	277	240	293	249	291
	460	480	416	508	432	504
	575	600	520	635	540	630
50	230	230	198	254	208	254
	400	400	344	440	360	440

Notes:

1. Operating voltage is the min and max voltage for which the unit can function. Never operate outside of this min and max voltage.
2. The Acceptable Performance Range is the min and max voltage for which the unit performance is designed and rated to give acceptable performance.

⚠ WARNING

Electric shock hazard. Before attempting to perform any installation, service, or maintenance, shut off all electrical power to the unit at the disconnect switches. Unit may have multiple power supplies. Failure to disconnect power could result in dangerous operation, serious injury, death, or property damage.

Route power and control wiring, separately, through the utility entry in the base of the unit. Do not run power and control signal wires in the same conduit. The utility entry is located in the unit base in the front right hand corner of the unit (compressor compartment). See unit drawing for specific location.

⚠ CAUTION

Electrical and gas entries into the unit must be properly sealed. Failure to seal the entries may result in damage to the unit and property.

⚠ CAUTION

Ensure that wires are protected from damage and wear caused by normal operation of unit and environmental factors.

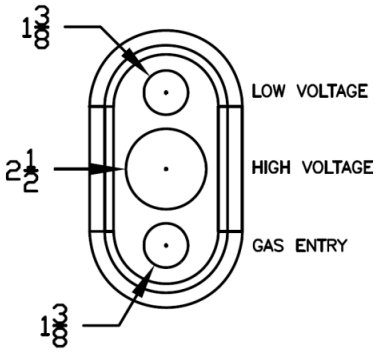

Figure 18 - Unit Base Utility Entry

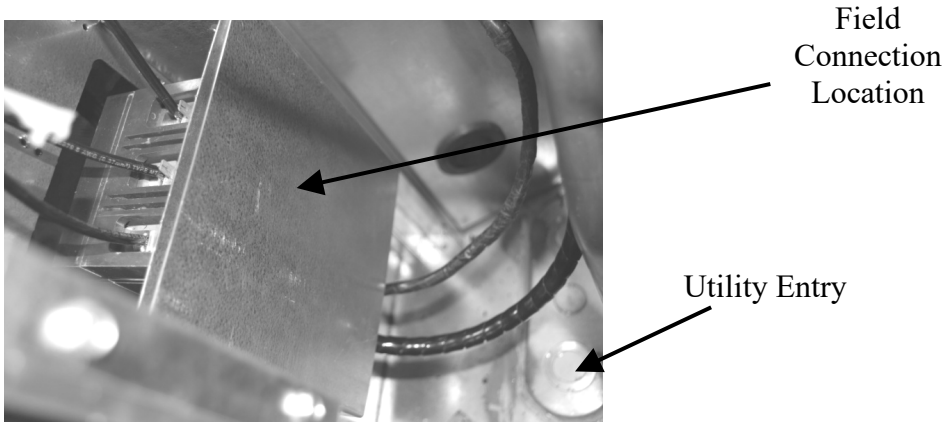

Figure 19 - Back View of Power Switch from Control Compartment

Size supply conductors based on the unit MCA rating. Supply conductors must be rated a minimum of 75°C (167°F).

Protect the branch circuit in accordance with code requirements. The unit must be electrically grounded in accordance with local codes, or in the absence of local codes, the current National Electric Code, ANSI/NFPA 70 or the current Canadian Electrical Code CSA C22.1.

Note: All units are factory wired for 208V, 230V, 380V, 460V, or 575V. The transformer configuration must be checked by a qualified technician prior to service, especially if unit is to be connected to a 208V or 230V supply. For 208V service interchange the yellow and red conductor on the low voltage control transformer.

Red-Black for 208V
Yellow-Black for 230V

Wire power leads to the unit's terminal block or main disconnect. All wiring beyond this point has been completed by the manufacturer and cannot be modified without affecting the unit's agency/safety certification.

Available short circuit current must not exceed the short circuit current rating (SCCR) shown on the unit nameplate.

⚠ CAUTION

Three phase voltage imbalance will cause motor overheating and premature failure.

Three phase voltage imbalance will cause motor overheating and premature failure. The maximum allowable imbalance is 2%.

Voltage imbalance is defined as 100 times the maximum deviation from the average voltage divided by the average voltage.

Example:
(221V+230V+227V)/3 = 226V, then 100*(226V-221V)/226V = 2.2%, which exceeds the allowable imbalance.

Check voltage imbalance at the unit disconnect switch and at the compressor terminal. Contact your local power company for line voltage corrections.

It must be verified that proper motor rotation and blower motor amperage listed on the motor nameplate is not exceeded. Motor overload protection may be a function of the variable frequency drive and must not be bypassed.

⚠ CAUTION

Rotation must be checked on all MOTORS AND COMPRESSORS of three phase units. Supply fan, exhaust fan, and condenser fan motors must all be checked by a qualified service technician at startup and any wiring alteration must only be made at the unit power connection.

Wire control signals to the unit's low voltage terminal block located in the controls compartment.

⚠ CAUTION

Scroll compressors are directional and will be damaged by operation in the wrong direction. Low pressure switches on compressors have been disconnected after factory testing. Rotation must be checked by a qualified service technician at startup using suction and discharge pressure gauges and any wiring alteration must only be made at the unit power connection.

Table 3 – 35 KAIC Fuse Sizing

35 KAIC Construction		
Component	**Description**	**Interrupting Rating (kA)**
Fuse	Class CC, 600V, 0.5A - 30A	200
Fuse	Class J, 600V, 35A - 600A	200
Disconnect	3P, 600V, 15A - 600A	35

Table 4 – 65 KAIC Fuse Sizing

65 KAIC Construction		
Component	**Description**	**Interrupting Rating (kA)**
Fuse	Class CC, 600V, 0.5A - 30A	200
Fuse	Class J, 600V, 35A - 600A	200
Disconnect	3P, 600V, 15A - 600A	65

Variable Speed Compressors
Variable speed compressors with an inverter drive are available on 2-6 ton units. Variable speed compressors must not be operated

outside the factory determined frequency range. The factory determined compressor frequency range is given below in Table 5. For more information on the variable speed compressor, reference the RQ Series *Variable Speed Compressor Supplement* (V83980).

Table 5 - Single Circuited Variable Speed Compressor Frequency Range

Model (RQ)	*Compressor Range (rpm)*
A, B	**900-5000 rpm**

Thermostat Control Wiring

If a thermostat is used for unit control, locate thermostat on an inside wall 1.2-1.5 meters (4-5 feet) above the floor where it will not be subjected to drafts, sun exposure, or heat from electrical fixtures of appliances. Control wiring must deliver adequate voltage to components to assure proper operation. Control voltage returning from controller circuit must be a minimum of 21 VAC. To assure proper wiring use the following chart to determine the allowable wiring distances.

Table 6 - Control Wiring

Wire Size (Stranded) - Copper Conductors Only	Total Wire Distance Allowable	
20 AWG	60.96 m	200 ft
18 AWG	106.7 m	350 ft
16 AWG	152.4 m	500 ft
14 AWG	228.6 m	750 ft
12 AWG	381.0 m	1250 ft

Take the total wire distance allowable and divide by the number of wires to be connected. This indicates the distance allowable for that size wire. The wiring to the unit must not exceed the total wire distance allowable. If the voltage at the connectors is less than 21 VAC, isolation relays must be installed. If under external control 21 VAC must be field verified.

All external devices must be powered via a separate external power supply.

Example:
A total of 8 wires must be pulled 75ft to control the unit. What size wire must be used?

According to the Table 4, 16 AWG allows for 63ft (500 ft/8 wires) and 14 AWG allows for 94ft (750 ft/8 wires). Thus, 14 AWG must be used.

Condensate Drain Piping

2-6 ton units are equipped with one condensate drain pan connection on the left side of the unit. P-trap must be field provided and installed.

All drain connections must be used and individually trapped to ensure a minimum amount of condensate accumulation in the drain pans. ABS type cement must be used to join the drain pipe connections.

Note: The drain pan connections are 2.5 cm (1”) MPT fitting.

Drainage of condensate directly onto the roof may be acceptable in certain areas, refer to local codes. If condensate is to drain directly onto the roof a small drip pad must be placed below the drain to protect the roof from possible damage.

If condensate is piped into the building drainage system, the drain pipe must penetrate the roof external to the unit itself. The drain line must be pitched away from the unit at least 1/8 inch per foot. On longer runs an air break must be used to ensure proper drainage.

⚠ CAUTION

Unit must not be operated without a p-trap. Failure to install a p-trap may result in overflow of condensate water into the unit.

Draw-through cooling coils will have a negative static pressure in the drain pan area. This will cause an un-trapped drain to back up due to air being pulled up through the condensate drain piping.

Condensate drain trapping and piping must conform to all applicable governing codes.

Draw-Through Coils

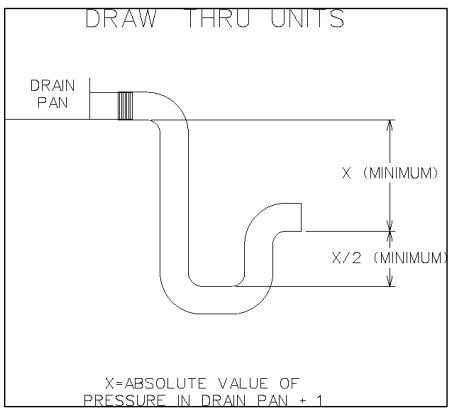

Figure 20 - Draw-Through Drain Trap

The X dimension on the draw-through trap must be at least equal to the absolute value of the negative static pressure in the drain pan plus one inch. To calculate the static pressure at the drain pan add the pressure drops of all components upstream of the drain pan, including the cooling coil, and add the return duct static pressure. Include the dirt allowance pressure drop for the filters to account for the worst-case scenario.

The height from top of the bottom bend of the trap to the bottom of the leaving pipe must be at least equal to one half of the X dimension. This ensures that enough water is stored in the trap to prevent losing the drain seal during unit startup

Note: The absolute value of the fan inlet pressure will always be greater than or equal to the absolute value of the static pressure in the drain pan on draw-through units, so the fan inlet pressure is a safe value to use for the drain pan static pressure.

Table 7 - Draw-Through Drain Trap Dimensions (Metric)

Draw-Through		
Drain Pan Pressure	Trap Dimensions	
Negative Static	X	X/2
(mmHg)	(millimeters)	(millimeters)
-0.93	38.1	19.1
-1.87	50.8	25.4
-2.80	63.5	31.8
-3.74	76.2	38.1
-4.67	88.9	44.5
-5.60	101.6	50.8
-6.54	114.3	57.2
-7.47	127	63.5

Note: 1 mm = 0.1 cm

Table 8 - Draw-Through Drain Trap Dimensions (Imperial)

Draw-Through		
Drain Pan Pressure	Trap Dimensions	
Negative Static	X	X/2
(inches of water)	(inch)	(inch)
-0.50	1.50	0.75
-1.00	2.00	1.00
-1.50	2.50	1.25
-2.00	3.00	1.50
-2.50	3.50	1.75
-3.00	4.00	2.00
-3.50	4.50	2.25
-4.00	5.00	2.50

Non-Compressorized Liquid and Suction Line Piping

There are two different locations to pipe out of the unit, the post corner hole location and the post back hole location. The post corner hole location is to run pipe along the roof and

then down by the disconnect switch (Figure 20 and Figure 22). The post back hole location is to run the pipe along the roof, back across the coil, and come out near the blower access panel (Figure 21 and Figure 23).

When drilling the holes, use a 3.2 cm (1 ¼”) inch hole for the suction line and a 1 inch hole for the liquid line (Figure 20 and Figure 21). For pipe sizing, refer to appropriate guidelines in the condenser or condensing unit installation manual. The grommets will help seal in between the holes in the sheet metal and the piping. If you are piping through the back post foam panel, attach grommet to the inside skin of the foam part. If you are piping through post corner hole location, use caution around electrical wires. You will need to turn off power to the unit.

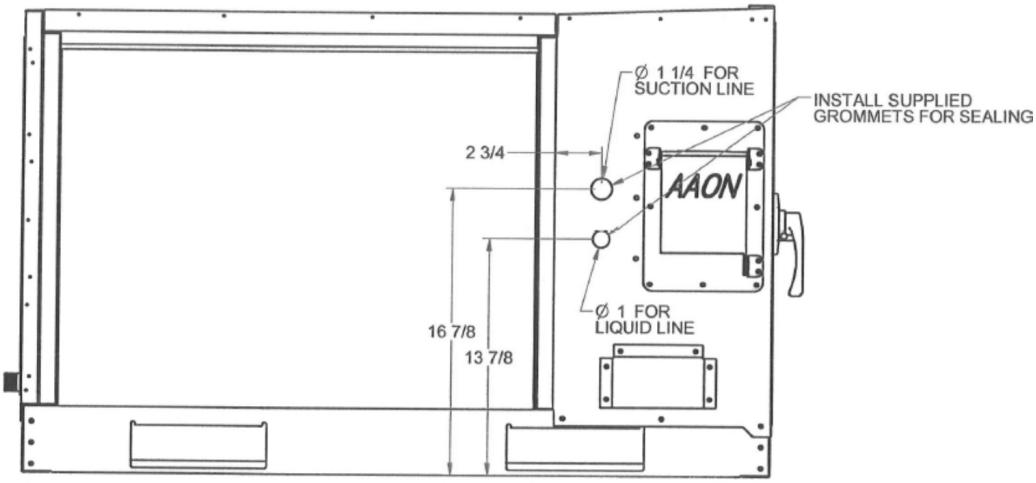

Figure 21 - Post Corner Hole Location

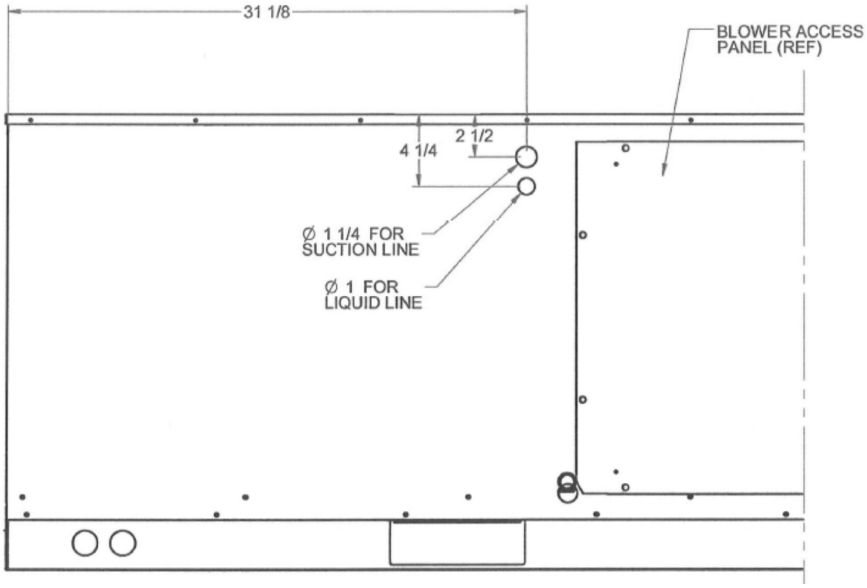

Figure 22 - Post Back Hole Location

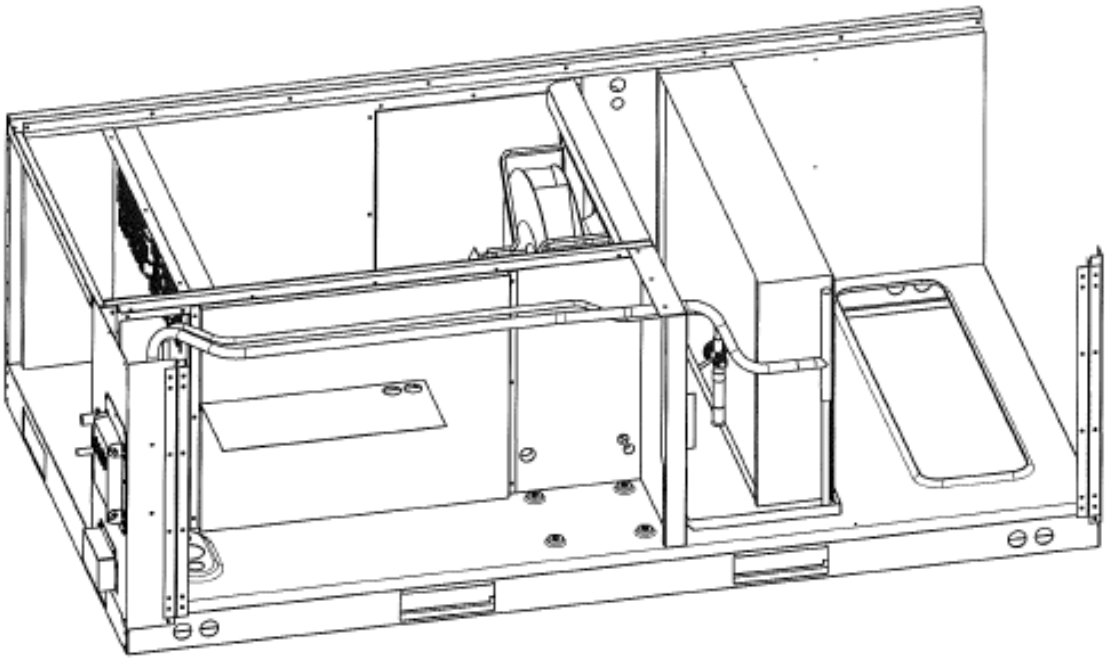

Figure 23 - Post Corner Hole Piping

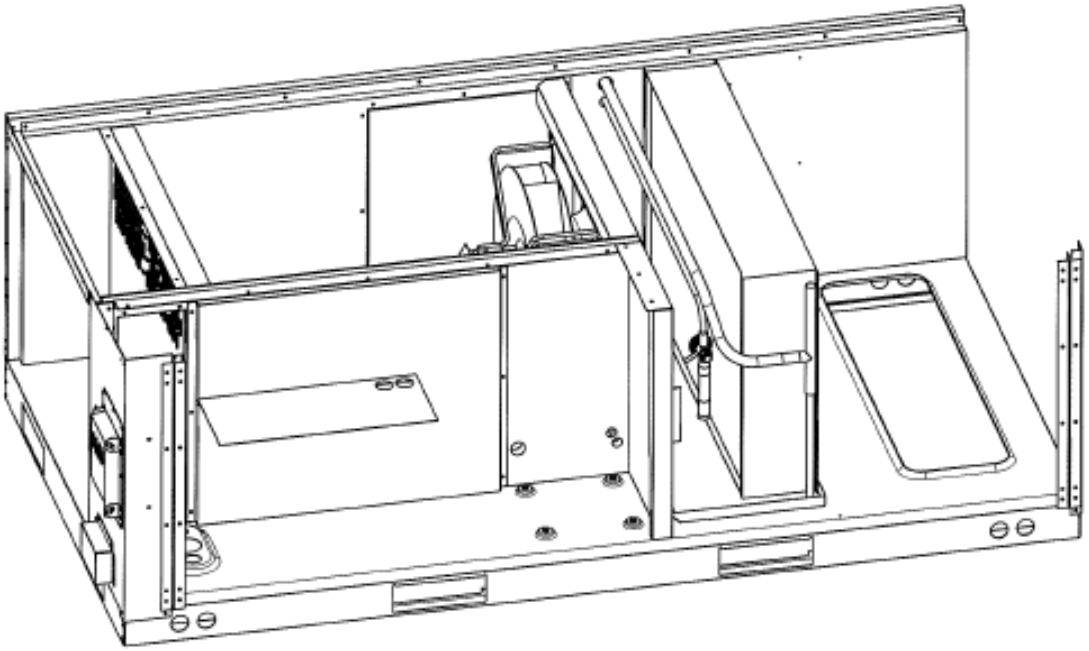

Figure 24 - Post Back Hole Piping

Startup

(See back of the manual for startup form.)

⚠ WARNING

Improper installation, adjustment, alteration, service or maintenance can cause property damage, personal injury or loss of life. Startup and service must be performed by a Factory Trained Service Technician.

⚠ WARNING

Electric shock hazard. Shut off all electrical power to the unit to avoid shock hazard or injury from rotating parts.

During startup, it is necessary to perform routine checks on the performance of the unit. This includes checking the air flow, air filters, condenser water flow, dampers, heaters, and refrigerant charge.

Filters

Do not operate the unit without filters in place. Unit must be checked for correct filter placement during startup. Operation of the equipment without filters will result in a clogged evaporator coil.

⚠ CAUTION

Before completing startup and leaving the unit a complete operating cycle must be observed to verify that all components are functioning properly.

Supply Fan EC Motor Startup

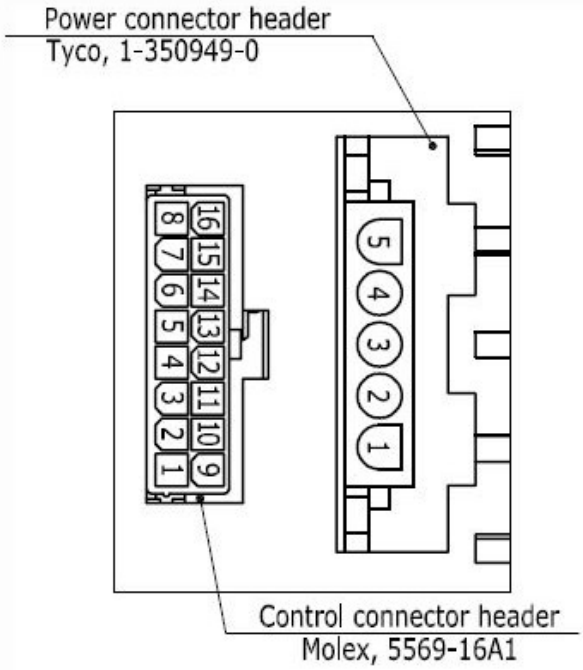

Pin No.	Control connector Description
1	TRX-(RS485 Port)
2	N.C
3	RPM Out
4	GND
5	10V Output
6	N.C
7	GND
8	VSP, PWM Input
9	GND
10	TRX+(RS485 Port)
11	GND
12	N.C
13	C.W. / C.C.W.
14	N.C
15	Fault Out
16	GND

Pin No.	Power connector Description
1	Pin No. 1 & 2 Close : 115V
2	Pin No. 1 & 2 Open : 230V
3	G
4	N
5	L

* Suggested mating connector
1) Power connector housing
: Tyco, 1-480763-0
2) Control connector housing
: Molex, 5557-16R

Figure 25 - PIN Connectors on EC Supply Fan Motor Electronics

Speed adjustment is made by varying the DC voltage on pin 8 (+) & 16 (-). If AAON Orion Control systems are installed on the system, then they will provide the 0-10VDC signal for speed control. The controller will be wired directly to pin 8 & 16. If a potentiometer is installed in the unit, the 10VDC output of the motor electronics will be wired through the potentiometer and then back into pin 8 & 16 for speed control. By adjusting the potentiometer from 0-100% you can manually adjust the speed of the motor.

If the rotation direction is wrong, check the brown wire on the control connector and ensure that it is connected from pin 13 to pin 11. Making/Breaking this wire changes the rotation of the motor.

If there is no rotation and/or no speed change, try the following:

1. Check the line-to-line voltage on the fuse block connected to the supply fan motor and ensure it is between 187VAC to 264VAC
2. Turn the potentiometer to 50%
3. Energize the BC relay by making a blower call.
4. Check DC voltage on S1 (-) and S2 (+), 0-10VDC signal on S1 & S2 sets the speed of the motor – thus 0VDC is no speed and 10VDC is full speed.
5. If DC Voltage is present on S1 & S2 then ensure that BC (blower relay) is energized and is passing the DC voltage through to the motor. If BC is not energized then check wiring for 24VAC blower call.
6. If no DC voltage is present on S1 & S2 then check S1 (-) & S3 (+), this is the +10VDC output from the motor that is supplied to the Potentiometer for speed control.

If the following troubleshooting suggestions do not solve the issue, contact AAON for assistance.

Adjusting Refrigerant Charge

Adjusting the charge of a system in the field must be based on determination of liquid sub-cooling and evaporator superheat. On a system with a TXV liquid sub-cooling is more representative of the charge than evaporator superheat but both measurements must be taken.

⚠ CAUTION

The Clean Air Act of 1990 bans the intentional venting of refrigerant (CFC's and HCFC's) as of July 1, 1992. Approved methods of recovery, recycling or reclaiming must be followed. Fines and/or incarceration may be levied for non-compliance.

Before Charging

Unit being charged must be at or near full load conditions before adjusting the charge.

Units equipped with hot gas reheat must be charged with the hot gas reheat valves closed while the unit is in cooling mode to get the proper charge. After charging, unit must be operated in reheat (dehumidification) mode to check for correct operation.

Units equipped with heat pump options must be charged in heating mode to get the proper charge. After charging, unit must be operated in cooling mode to check for correct charge. Charge may need to be adjusted for cooling mode. If adjustments are made in the cooling mode, heating mode must be rerun to verify proper operation.

After adding or removing charge, the system must be allowed to stabilize, typically 10-15 minutes, before making any other adjustments.

The type of unit and options determine the ranges for liquid sub-cooling and evaporator superheat. Refer to Table 7 and Table 8 below when determining the proper sub-cooling.

Checking Liquid Sub-Cooling

Measure the temperature of the liquid line as it leaves the condenser coil.

Read the gauge pressure at the liquid line close to the point where the temperature was taken. You must use liquid line pressure as it will vary from discharge pressure due to condenser coil pressure drop.

Convert the pressure obtained to a saturated temperature using the appropriate refrigerant temperature-pressure chart.

Subtract the measured liquid line temperature from the saturated temperature to determine the liquid sub-cooling.

Compare calculated sub-cooling to Table 7 and Table 8 for the appropriate unit type and options.

Checking Evaporator Superheat

Measure the temperature of the suction line close to the compressor. Read gauge pressure at the suction line close to the compressor.

Convert the pressure obtained to a saturated temperature using the appropriate refrigerant temperature-pressure chart.

Subtract the saturated temperature from the measured suction line temperature to determine the evaporator superheat.

Compare calculated superheat to the table below for the appropriate unit type and options.

⚠ CAUTION

Thermal expansion valve must be adjusted to approximately 4.4-8.3°C (8-15°F) of suction superheat. Failure to have sufficient superheat will damage the compressor and void the warranty.

Table 9 - Acceptable Refrigeration Circuit Values (Metric)

Air-Cooled Cond./Air-Source Heat Pump In Cooling Mode	
Sub-Cooling	4.4-8.3°C / 1.1-2.2°C (HP)*
Sub-Cooling with Hot Gas Reheat	4.4-8.3°C /1.1-3.3°C (HP)*
Superheat	4.4-8.3°C
Water-Cooled Cond./Water-Source Heat Pump In Cooling Mode	
Sub-Cooling	2.2-4.4°C
Superheat	4.4-8.3°C

Table 10 – Acceptable Refrigeration Circuit Values (Imperial)

Air-Cooled Cond./Air-Source Heat Pump In Cooling Mode	
Sub-Cooling	8-15°F / 2-4°F (HP)*
Sub-Cooling with Hot Gas Reheat	8-15°F /2-6°F (HP)*
Superheat	8-15°F
Water-Cooled Cond./Water-Source Heat Pump In Cooling Mode	
Sub-Cooling	4-8°F
Superheat	8-15°F

Table 11 - Acceptable Microchannel Air-Cooled Condenser Coil Liquid Sub-Cooling Values (Metric)

	Cooling Mode Liquid Sub-Cooling Values(°C)				
Ambient (°C)	Evaporator Coil Saturation Temperature (°C)				
	4.4	7.2	8.9	10.0	12.8
19.4	5.0 - 7.8	4.4 - 7.2	4.4 - 7.2	3.9 - 6.7	2.8 - 5.6
22.2	5.6 - 8.3	5.0 - 7.8	5.0 - 7.8	4.4 - 7.2	3.9 - 6.7
27.8	5.6 - 8.3	5.6 - 8.3	5.6 - 8.3	5.0 - 7.8	3.9 - 6.7
35.0	5.6 - 8.3	5.6 - 8.3	5.6 - 8.3	5.0 - 7.8	4.4 - 7.2
40.6	6.1 - 8.9	6.1 - 8.9	5.6 - 8.3	5.6 - 8.3	4.4 - 7.2
46.1	5.6 - 8.3	6.1 - 8.9	6.1 - 8.9	6.1 - 8.9	5.0 - 7.8

Table 12 - Acceptable Microchannel Air-Cooled Condenser Coil Liquid Sub-Cooling Values (Imperial)

	Cooling Mode Liquid Sub-Cooling Values(°F)				
Ambient (°F)	Evaporator Coil Saturation Temperature (°F)				
	40	45	48	50	55
67	9 - 14	8 - 13	8 - 13	7 - 12	5 - 10
72	10 - 15	9 - 14	9 - 14	8 - 13	7 - 12
82	10 - 15	10 - 15	10 - 15	9 - 14	7 - 12
95	10 - 15	10 - 15	10 - 15	9 - 14	8 - 13
105	11 - 16	11 - 16	10 - 15	10 - 15	8 - 13
115	10 - 15	11 - 16	11 - 16	11 - 16	9 - 14

Notes:

1. Microchannel condenser coils are more sensitive to charge. The system must be running in cooling mode with compressor, supply airflow & condenser fan speed at full load. The sub-cooling value changes depending on the ambient temperature reading and the microchannel evaporator coil saturation temperature. To find the correct sub-cooling value, find the ambient temperature on the first column and follow that across to the SST (4.4-12.8°C [40-55°F]).
2. Superheat for Microchannel condenser coils must be between 4.4 and 8.3°C (8 - 15°F).

Adjusting Sub-cooling and Superheat Temperatures

The system is overcharged if the sub-cooling temperature is too high and the evaporator is fully loaded (low loads on the evaporator result in increased sub-cooling) and the evaporator superheat is within the temperature range as shown in the table above (high superheat results in increased sub-cooling).

Correct an overcharged system by reducing the amount of refrigerant in the system to lower the sub-cooling.

The system is undercharged if the superheat is too high and the sub-cooling is too low

Correct an undercharged system by adding refrigerant to the system to reduce superheat and raise sub-cooling.

If the sub-cooling is correct and the superheat is too high, the TXV may need adjustment to correct the superheat.

Table 13 - R-410A Refrigerant Temperature-Pressure Chart (Metric)

°F	PSIG	°F	PSIG	°F	PSIG	°F	PSIG	°F	PSIG
20	78.3	**47**	134.7	**74**	213.7	**101**	321.0	**128**	463.2
21	80.0	**48**	137.2	**75**	217.1	**102**	325.6	**129**	469.3
22	81.8	**49**	139.7	**76**	220.6	**103**	330.2	**130**	475.4
23	83.6	**50**	142.2	**77**	224.1	**104**	334.9	**131**	481.6
24	85.4	**51**	144.8	**78**	227.7	**105**	339.6	**132**	487.8
25	87.2	**52**	147.4	**79**	231.3	**106**	344.4	**133**	494.1
26	89.1	**53**	150.1	**80**	234.9	**107**	349.3	**134**	500.5
27	91.0	**54**	152.8	**81**	238.6	**108**	354.2	**135**	506.9
28	92.9	**55**	155.5	**82**	242.3	**109**	359.1	**136**	513.4
29	94.9	**56**	158.2	**83**	246.0	**110**	364.1	**137**	520.0
30	96.8	**57**	161.0	**84**	249.8	**111**	369.1	**138**	526.6
31	98.8	**58**	163.8	**85**	253.7	**112**	374.2	**139**	533.3
32	100.9	**59**	166.7	**86**	257.5	**113**	379.4	**140**	540.1
33	102.9	**60**	169.6	**87**	261.4	**114**	384.6	**141**	547.0
34	105.0	**61**	172.5	**88**	265.4	**115**	389.9	**142**	553.9
35	107.1	**62**	175.4	**89**	269.4	**116**	395.2	**143**	560.9
36	109.2	**63**	178.4	**90**	273.5	**117**	400.5	**144**	567.9
37	111.4	**64**	181.5	**91**	277.6	**118**	405.9	**145**	575.1
38	113.6	**65**	184.5	**92**	281.7	**119**	411.4	**146**	582.3
39	115.8	**66**	187.6	**93**	285.9	**120**	416.9	**147**	589.6
40	118.1	**67**	190.7	**94**	290.1	**121**	422.5	**148**	596.9
41	120.3	**68**	193.9	**95**	294.4	**122**	428.2	**149**	604.4
42	122.7	**69**	197.1	**96**	298.7	**123**	433.9	**150**	611.9
43	125.0	**70**	200.4	**97**	303.0	**124**	439.6		
44	127.4	**71**	203.6	**98**	307.5	**125**	445.4		
45	129.8	**72**	207.0	**99**	311.9	**126**	451.3		
46	132.2	**73**	210.3	**100**	316.4	**127**	457.3		

Table 14 - R-410A Refrigerant Temperature-Pressure Chart (Imperial)

°F	PSIG	°F	PSIG	°F	PSIG	°F	PSIG	°F	PSIG
20	78.3	**47**	134.7	**74**	213.7	**101**	321.0	**128**	463.2
21	80.0	**48**	137.2	**75**	217.1	**102**	325.6	**129**	469.3
22	81.8	**49**	139.7	**76**	220.6	**103**	330.2	**130**	475.4
23	83.6	**50**	142.2	**77**	224.1	**104**	334.9	**131**	481.6
24	85.4	**51**	144.8	**78**	227.7	**105**	339.6	**132**	487.8
25	87.2	**52**	147.4	**79**	231.3	**106**	344.4	**133**	494.1
26	89.1	**53**	150.1	**80**	234.9	**107**	349.3	**134**	500.5
27	91.0	**54**	152.8	**81**	238.6	**108**	354.2	**135**	506.9
28	92.9	**55**	155.5	**82**	242.3	**109**	359.1	**136**	513.4
29	94.9	**56**	158.2	**83**	246.0	**110**	364.1	**137**	520.0
30	96.8	**57**	161.0	**84**	249.8	**111**	369.1	**138**	526.6
31	98.8	**58**	163.8	**85**	253.7	**112**	374.2	**139**	533.3
32	100.9	**59**	166.7	**86**	257.5	**113**	379.4	**140**	540.1
33	102.9	**60**	169.6	**87**	261.4	**114**	384.6	**141**	547.0
34	105.0	**61**	172.5	**88**	265.4	**115**	389.9	**142**	553.9
35	107.1	**62**	175.4	**89**	269.4	**116**	395.2	**143**	560.9
36	109.2	**63**	178.4	**90**	273.5	**117**	400.5	**144**	567.9
37	111.4	**64**	181.5	**91**	277.6	**118**	405.9	**145**	575.1
38	113.6	**65**	184.5	**92**	281.7	**119**	411.4	**146**	582.3
39	115.8	**66**	187.6	**93**	285.9	**120**	416.9	**147**	589.6
40	118.1	**67**	190.7	**94**	290.1	**121**	422.5	**148**	596.9
41	120.3	**68**	193.9	**95**	294.4	**122**	428.2	**149**	604.4
42	122.7	**69**	197.1	**96**	298.7	**123**	433.9	**150**	611.9
43	125.0	**70**	200.4	**97**	303.0	**124**	439.6		
44	127.4	**71**	203.6	**98**	307.5	**125**	445.4		
45	129.8	**72**	207.0	**99**	311.9	**126**	451.3		
46	132.2	**73**	210.3	**100**	316.4	**127**	457.3		

⚠ CAUTION

DO NOT OVERCHARGE!

Refrigerant overcharging leads to excess refrigerant in the condenser coils resulting in elevated compressor discharge pressure.

Freeze Stat Startup
Freeze Stat is an adjustable temperature sensor (-23.3°C to 21.1°C [-10 to 70°F]) mounted on the tubing of the first cooling circuit and wired to de energize all cooling circuits if tubing temperature falls below setpoint. Option is used to prevent freezing of evaporator coil.

Recommended Setting: 0°C to 1.7°C (32° F to 35º F

Condenser Fan EC Motor Startup
The fan cycling option uses a fan cycle switch to switch between one of the discrete speed inputs (see Table 17) on the motor thus cycling between two preset speeds based upon discharge pressure of the unit. By connecting 24VAC to a single or combination of the yellow, white, or orange wires, the motor will run at the discrete speeds in Table 17.

AAON Condenser Head Pressure Module is used for variable speed control of the motor to maintain a head pressure. The motor must be factory wired to the PWM outputs of the AAON Condenser Head Pressure Module. See AAON literature for further information (https://www.aaon.com/Controls).

Note
High voltage wires out of the motor:
Black & Brown – 1 Phase Line Voltage
Green - Ground

Low control voltage wires out of the motor:
Blue – Common
Yellow – Variable Speed Control

Table 15 - EC Condenser Fan Cycling Options

Color	Terminal	Customer Connection	Option 1	Option 2	Option 3	Option 4	Option 5
Black	0.50 BWS	L1	208-230 VAC	208-230 VAC	208-230 VAC	208-230 VAC	208-230 VAC
Brown	0.50 BWS	L2	208-230 VAC	208-230 VAC	208-230 VAC	208-230 VAC	208-230 VAC
Green	#10 EYELET	Ground	GND	GND	GND	GND	GND
Blue	0.50 BWS	Common	Common	24 VAC	24 VAC	24 VAC	24 VAC
Yellow	0.50 BWS	Signal	PWM		24 VAC		24 VAC
White	0.50 BWS	Signal				24 VAC	24 VAC
Orange	0.50 BWS	Signal		24 VAC		24 VAC	
		RPM	300-1100	300	500	850	1100
		Rotation	CCW	CCW	CCW	CCW	CCW
		ECM Toolbox ID	Variable	Speed 4	Speed 3	Speed 2	Speed 1
		20% PWM RPM	300				
		100% PWM RPM	1100				

Adjustable Fan Cycling Switch Procedure

Recommended Settings
The switch will come factory set to cut-in at 2.93 Mpa [425psi] (+/– 5psi) and a differential of 1.69 Mpa [155psi] (or open at 1.86 Mpa [270psi] (+/– 5psi)).

Note: 5 psi = 34.5 kpa

To adjust the fan cycle switch you will need a flathead screwdriver.

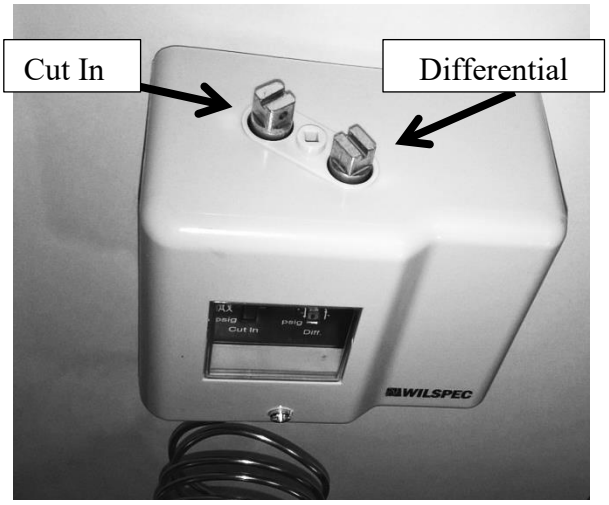

Settings for CUT IN and DIFFERENTIAL PRESSURE are indicated with two slider gauges.

Each adjustment screw sits above the setting that it controls.

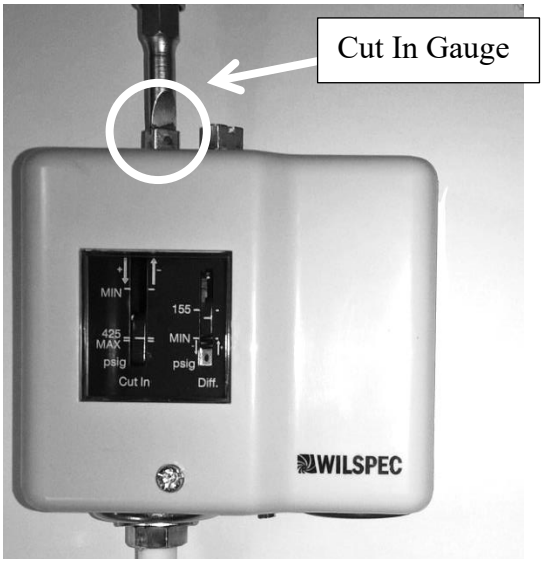

To lower the pressure set point for the **CUT IN** gauge, turn the adjustable screw clockwise.

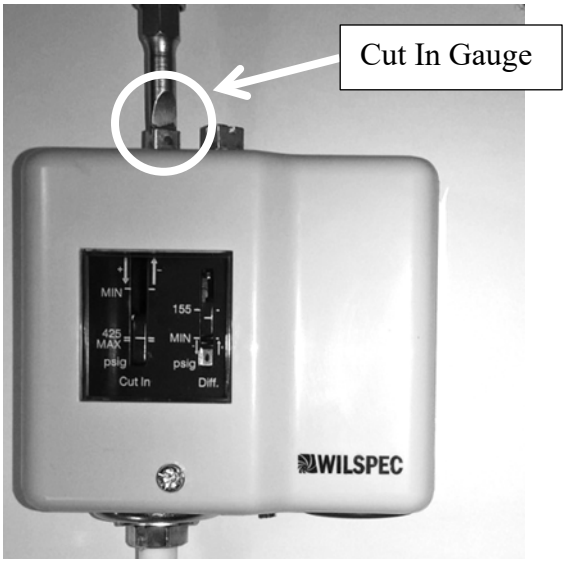

To raise the pressure set point for the **CUT IN** gauge, turn the adjustable screw counter clockwise.

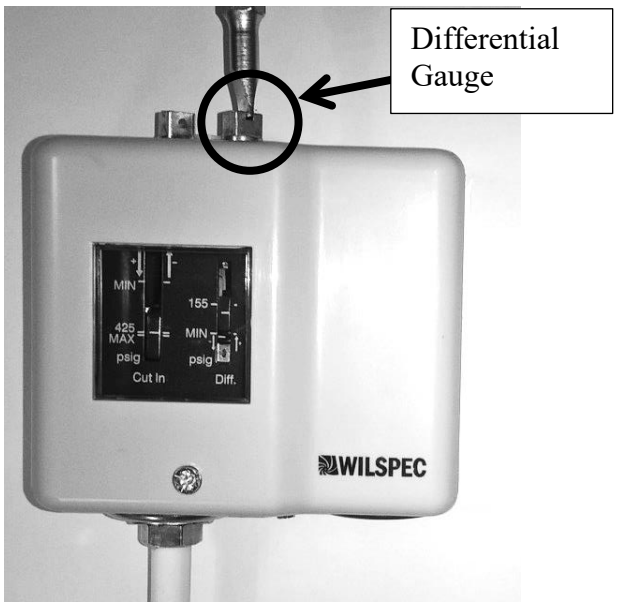

To raise the pressure set point for the **DIFFERENTIAL** Gauge, turn the adjustable screw clockwise.

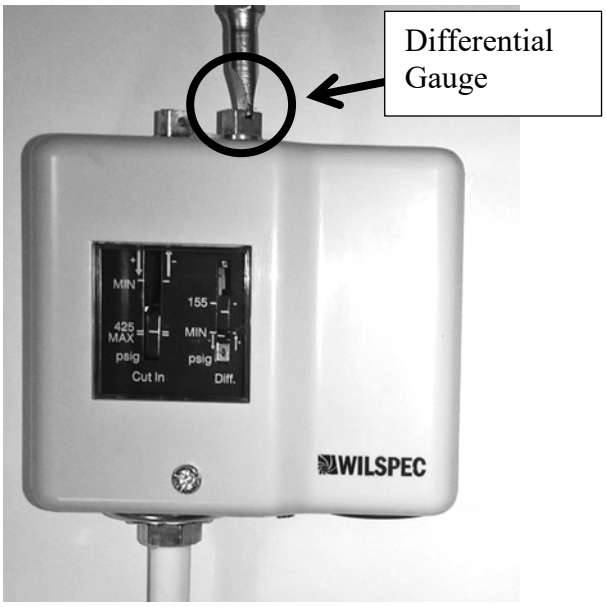

To lower the pressure set point for the **DIFFERENTIAL** Gauge, turn the adjustable screw counter clockwise.

NOTE: The pressure values on the gauge must be verified with gauges on the refrigerant line. The gauge scale is for illustration purposes only.

Operation

Unit operations must be controlled with thermostat, or unit controller, never at the main power supply, except for servicing, emergency, or complete shutdown of the unit.

Thermostat Operation

Heating

Thermostat system switch - "Heat"
Thermostat fan switch - "Auto" or "On"
Thermostat temperature set to desired point.

Cooling

Thermostat system switch - "Cool"
Thermostat fan switch - "Auto" or "On"
Thermostat temperature set to desired point.

Air Circulation

Thermostat system switch - "Off"
Thermostat fan switch - "Auto" or "On"
No change of the thermostat temperature.
With these settings, the supply blower will run continuously but the supply air will not be heated, cooled, or dehumidified.

System Off

Thermostat system switch - "Off"
Thermostat fan switch - "Auto"
No change of the thermostat temperature.
With these settings the system is shut down, with the exception of control system power.

Night and Weekend Unoccupied Operation

To reduce the operating time of the unit when the space is unoccupied, such as nights and weekends, it is recommended that the temperature setting be raised about 5°F while unoccupied during the cooling season and lowered about 10°F during the heating season.

Packaged DX Cooling Operation and Control

When a call for cooling (G and Y1, Y2, etc.) is made the supply blower motors and compressors will energize.

⚠ WARNING

COMPRESSOR CYCLING

3 MINUTE MINIMUM OFF TIME
To prevent motor overheating compressors must cycle off for a minimum of 3 minutes.

5 MINUTE MINIMUM ON TIME
To maintain the proper oil level compressors must cycle on for a minimum of 5 minutes.

The cycle rate must not exceed 7 starts per hour.

Note: When using field controls any variable capacity compressors must run at 100% for 1 minute when starting.

Gas Heater Operation

When heat (G and W1, W2, etc.) is called for the combustion motor starts and the ignition control is energized. The control sends 24 VAC to the main gas valve and high voltage to the igniter. If a burner flame has been detected within 10 seconds, the spark is extinguished and the flame continues. If a flame has not been detected after 10 seconds, the gas valve closes, the spark ceases and the induced draft blower continues to purge the heat exchanger. After 45 seconds of purge, the ignition system will attempt to light the burners again. Should no flame be detected after 3 tries, the ignition control will lock out the system. Power to the ignition control must be cycled to reset the heater control.

On a fault the gas train is shut down by a main limit located in the heat exchanger area or by an auxiliary limit mounted in the supply fan compartment.

Electric Heating Operation
When a call for heating (G and W1, W2, etc.) is made the supply blower motors and electric resistance heaters will energize. Heating is accomplished by passing electrical current through a specified amount of resistance heaters which will produce the required heat.

On a fault condition the main limit located in the supply air or the auxiliary limit located downstream the supply blower will remove power from all contactors.

Steam or Hot Water Preheating and Heating Operation
Valve control for steam and hot water heating coils are by others. Heating is accomplished by passing steam or hot water through the steam or hot water coil assembly.

Modulating Electric Preheat
Electric preheat is used to temper the incoming outside air to the unit based on an enable control signal and outside air conditions. Electric preheat has a maximum operation outside air temperature of 15.6°C (60°F) and a maximum preheat discharge air temperature of 26.7°C (80°F).

Chilled Water or Non-Compressorized DX Cooling Operation
Controls for chilled water cooling coils and non-compressorized DX coil are by others.

Maintenance
(See back of the manual for maintenance log)

At least once each year, a trained, qualified service technician must check out the unit. Fans, evaporator coils, and filters must be inspected at least monthly.

Supply Fan

⚠ WARNING

Electric shock hazard. Shut off all electrical power to the unit to avoid shock hazard or injury from rotating parts.

⚠ CAUTION

Blower wheels and bands must be inspected for excessive dust build up periodically and cleaned if required. Excessive dust build up on blower wheels may cause an unbalanced state; leading to vibration and/or component failure. Damages due to excessive dust build up will not be covered under factory warranty.

Factory Lubrication
Note: Bearing lubrication only applies to belt driven fan motors such as the energy recovery wheel power exhaust fan motor.

All original fan motors and bearings are furnished with factory lubrication. Some applications will require that bearings be re-lubricated periodically. The schedule will depend on the operating duty, temperature variations or other severe atmospheric conditions.

Bearings must be re-lubricated when at normal operating temperatures, but not running. Rotate the fan shaft by hand and add only enough grease to purge the seals. DO NOT OVERLUBRICATE.

Recommended greases are:
SHELL OIL - DOLIUM R
CHEVRON OIL - SRI No. 2
TEXACO INC. - PREMIUM RB
Removal

Remove fan access panel on the back side of the unit. Panel is attached with eight 8 mm (5/16") bolts.

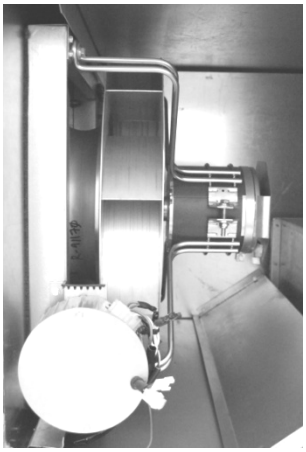

Figure 26 - 2-6 ton Supply Fan

Remove wire connections from motor. For EC motors unplug the wire harness at the control module that connects to the unit control panel.

Through the blower access opening, remove the two 8 mm (5/16") bolts that connect the blower assembly to the inlet wall (see Figure 26).

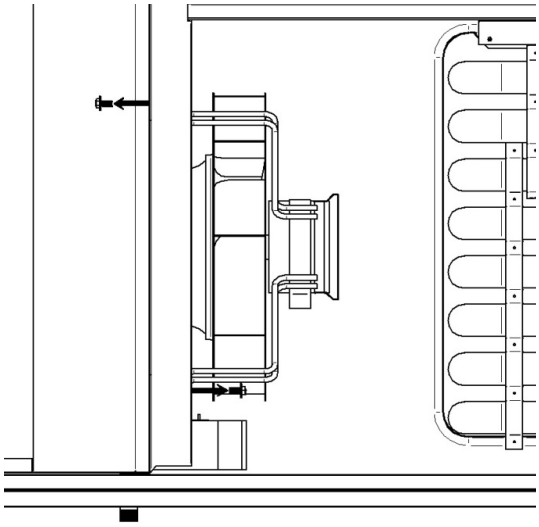

Figure 27 - RQ Supply Fan Removal Bolts

Through the coil access door, remove the two 8 mm (5/16") bolts that connect the blower assembly to the inlet wall from air entering side of the wall (see Figure 26).

Slide blower assembly (wire frame motor mount, motor, blower wheel, inlet, and sheet-metal slide) out of unit through blower access opening (see Figure 27).

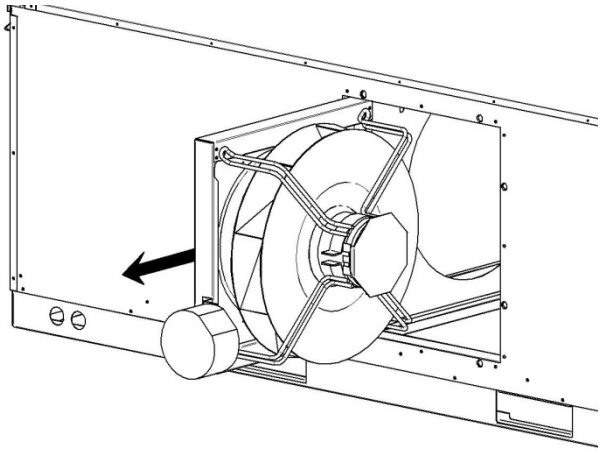

Figure 28 - RQ Supply Fan Removal Slide

DX Cooling

Set unit controls to cooling mode of operation with supply fans on. Check the fan for correct operating direction, amperage and voltage. Check compressor operation, rotation, amperage and voltage to the unit nameplate (check the amperage on the load side of the compressor contactor).

Condensate Drain Pans

Drain pans will have moisture present and require periodic cleaning to prevent microbial growth. Cleaning of the drain pans will also prevent any possible plugging of the drain lines and overflow of the pan itself. Cleaning of the drain pans and inside of the unit must be done only by qualified service technician.

E-Coated Coil Cleaning
Documented routine cleaning of e-coated coils is required to maintain coating warranty coverage for fin and tube and microchannel coils. E-Coated Coil Maintenance Record sheets are provided in the appendix.

⚠ WARNING

Electric shock hazard. Shut off all electrical power to the unit to avoid shock hazard or injury from rotating parts.

Surface loaded fibers or dirt must be removed prior to water rinse to prevent restriction of airflow. If unable to back wash the side of the coil opposite of the coils entering air side, then surface loaded fibers or dirt must be removed with a vacuum cleaner. If a vacuum cleaner is not available, a ***soft non-metallic*** bristle brush may be used. In either case, the tool must be applied in the direction of the fins. Coil surfaces can be easily damaged (fin edges bent over) if the tool is applied across the fins.

Use of a water stream, such as a garden hose, against a surface loaded coil will drive the fibers and dirt into the coil. This will make cleaning efforts more difficult. Surface loaded fibers must be completely removed prior to using low velocity clean water rinse.

A ***monthly*** clean water rinse is recommended for coils that are applied in coastal or industrial environments to help to remove chlorides, dirt, and debris. It is very important when rinsing, that water temperature is less than 54.4°C (130°F) and pressure is less than 689.5 kpa (100 psig) to avoid damaging the fin edges. An elevated water temperature (not to exceed 54.4°C [130°F]) will reduce surface tension, increasing the ability to remove chlorides and dirt.

⚠ CAUTION

High velocity water from a pressure washer or compressed air must only be used at a very low pressure to prevent fin and/or coil damages. The force of the water or air jet may bend the fin edges and increase airside pressure drop. Reduced unit performance or nuisance unit shutdowns may occur.

Quarterly cleaning is essential to extend the life of an e-coated coil and is required to maintain coating warranty coverage.
Coil cleaning shall be part of the unit's regularly scheduled maintenance procedures. Failure to clean an e-coated coil will void the warranty and may result in reduced efficiency and durability.

⚠ CAUTION

Harsh chemicals, household bleach, or acid cleaners must not be used to clean outdoor or indoor e-coated coils. These cleaners can be very difficult to rinse out of the coil and can accelerate corrosion and attack the E-coating. If there is dirt below the surface of the coil, use the recommended coil cleaners.

For routine quarterly cleaning, first clean the coil with the below approved coil cleaner. After cleaning the coils with the approved cleaning agent, use the approved chloride remover to remove soluble salts and revitalize the unit.

Recommended Coil Cleaner
The following cleaning agent, when used in accordance with the manufacturer's

directions on the container for proper mixing and cleaning, has been approved for use on e-coated coils to remove mold, mildew, dust, soot, greasy residue, lint, and other particulate:

Enviro-Coil Cleaner: AAON PN: V82540

GulfClean ™ Coil Cleaner ; AAON PN: G074480

Recommended Chloride Remover
GulfClean Salt Reducer™ ; AAON PN: G074490

GulfClean Salt Reducer™ is used to remove soluble salts from the e-coated coil, follow the manufacturer's instructions. This product is not intended for use as a degreaser. Any grease or oil film must first be removed with GulfClean ™ Coil Cleaner.

Remove Barrier - First ensure the power to the unit is off and locked out. Clean the area around the unit if needed to ensure leaves, grass or loose debris will not be blown into the coil. Soluble salts adhere themselves to the substrate. For the effective use of this product, the product must be able to come in contact with the salts. These salts may be beneath any soils, grease or dirt; therefore, these barriers must be removed prior to application of this product. As in all surface preparation, the best work yields the best results.

Application- Apply GulfClean ™ Coil Cleaner directly onto the substrate. Sufficient product must be applied uniformly across the substrate to thoroughly wet out surface, with no areas missed. This may be accomplished by use of a pump-up sprayer or conventional spray gun. Apply the cleaner to unit interior air exiting side coil surfaces first. Work in sections/panels moving side to side and from top to bottom. Allow the cleaning solution to soak for 5 to 10 minutes. Then move on to the exterior using the same method.

Rinse - Using pressurized potable water such as a garden hose, (< 689.5 kpa [100 psi]), rinse the coils and continue to always work in sections/panels.

Continue until all coil areas on the inside of the unit have been rinsed. ***Note: Coils must always be cleaned / back flushed, opposite of airflow to prevent impacting the dirt into the coil.***

Repeat these steps with GulfClean ™ Salt Reducer. When finished replace all panels and tops that were removed.

Microchannel Coil Cleaning
Cleaning microchannel coils is necessary in all locations. In some locations it may be necessary to clean the coils more or less often than recommended. Condenser coil must be cleaned at a minimum of once a year. In locations where there is commonly debris or a condition that causes dirt/grease build up it may be necessary to clean the coils more often. Proper procedure must be followed at every cleaning interval. Using improper cleaning technique or incorrect chemicals will result in coil damage, system performance fall off, and potentially leaks requiring coil replacement.

Documented routine cleaning of microchannel coils with factory provided e-coating is required to maintain coating warranty coverage. Use the E-Coated Coil Cleaning section for details on cleaning e-coated coils.

Field applied coil coatings are not recommended with microchannel coils.

Allowed Chemical Cleaners and Procedures
AAON recommends certain chemicals that can be used to remove buildup of grime and debris on the surface of microchannel coils. These chemicals have been tested for performance and safety and are the only chemicals that AAON will warrant as correct for cleaning microchannel coils.

There are three procedures that are outlined below that will clean the coils effectively without damage to the coils. Use of any other procedure or chemical may void the warranty to the unit where the coil is installed. **With all procedures make sure the unit is off before starting.**

⚠ WARNING

Electric shock hazard. Shut off all electrical power to the unit to avoid shock hazard or injury from rotating parts.

The water pressure used to clean must not exceed 689.5 kpa (100 psi), from no closer than 15.2 cm (6 inches) from the coils, and with the water aimed perpendicular to the coils.

#1 Simple Green
Simple Green is available from AAON Parts and Supply (Part# T10701) and is biodegradable with a neutral 6.5 pH A 4 to 1 solution is recommended. Use the following procedure.

1. Rinse the coil completely with water. Use a hard spray but be careful not to bend or damage the fins. A spray that is too hard will bend the fins. Spray from the fan side of the coil.
2. With a pump sprayer filled with a mix of 4 parts water to one part Simple Green spray the air inlet face of the coil. Be sure to cover all areas of the face of the coil.
3. Allow the coil to soak for 10-15 minutes.
4. Rinse the coil with water as in step one.
5. Repeat as necessary.

#2 Water Flush
This procedure can be used when the only material to cause the coil to need cleaning is debris from plant material that has impinged the coil face.

1. Rinse the coil completely with water. Use a hard spray but be careful not to bend or damage the fins. A spray that is too hard will bend the fins. Spray from the fan side of the coil.
2. Spray and rinse the coil from the face.

⚠ CAUTION

Use pressurized clean water, with pressure not to exceed 100 psi. Nozzle must be 15.2 cm (6”) and perpendicular to the coil face. Failure to do so could result in coil damage.

Application Examples
The two procedures can be used to clean microchannel coils. They will fit with the application depending on the area. In some areas where the spring/summer has a large cottonwood bloom #2 might work fine if the unit is installed on an office building and no other environmental factors apply.

Generally the best and broadest based procedure is #1. The grease cutting effect of the Simple Green is good for restaurant applications.

Other Coil Cleaners
There are many cleaners on the market for condenser coils. Before using any cleaner that is not covered in this section you must get written approval from the AAON warranty and service department. Use of unapproved chemicals will void the warranty.

AAON testing has determined that unless a chemical has a neutral pH (6-8) it must not be used.

Beware of any product that claims to be a foaming cleaner. The foam that is generated is caused by a chemical reaction to the aluminum fin material on tube and fin coils and with the fin, tube, and coating material on microchannel coils.

Microchannel coils are robust in many ways, but like any component they must be treated correctly. This includes cleaning the coils correctly to give optimal performance over many years.

Roofing
The cleaning procedures outlined here use relatively benign ingredients. When working with a rooftop unit care must be taken to make sure the chemicals will not adversely affect the roof coating. Checking with the roofing supplier/manufacturer is the best way to proceed. If the roofing supplier/manufacturer is not available testing of the chemicals on the roof coating is recommended.

Commercial roofing material manufacturers using PVC and EPDM have been contacted and indicate that there is no problem with any of the procedures outlined above.

Options
(See back of the manual for maintenance log)

Heating Coils
One or two row hot water and steam heating and preheating coils can be factory installed. All valve controls for heating operation are field supplied and field installed. Hot water and steam coil connections are spun copper tube.

Water coils must not be subjected to entering air temperatures below 3.3°C (38°F) to prevent coil freeze-up. If air temperature across the coil is going to be below this value, use a glycol solution to match the coldest air expected.

Table 16 - Hot Water Coil Connection Sizes

Model (RQ-)	Hot Water Coil Connection Size [mm (in.)]
002-006	(22) 7/8

Table 17 - Steam Coil Connection Sizes

Model (RQ-)	Steam Coil Connection Size [mm (in.)]
002-006	54 (2 1/8) (standard coil)/ 29 (1 1/8) (preheat coil)

Chilled Water Coil
Four or six row chilled water cooling coils can be factory installed. All valve controls for cooling operation are field supplied and field installed. Chilled water coil connections are spun copper tube.

WARNING

Piping, pressure limiting devices, backflow preventers and all other safety requirements shall be in accordance with national and local codes.

Table 18 - Chilled Water Coil Connection Sizes

Model (RQ-)	Chilled Water Coil Connection Size [mm (in.)]
002-006	29 (1 1/8)

Table 19 – Min and Max Water Pressures and Temps

	Chilled Water	Hot Water
Min. Entering Air	15.6°C (60°F)	4.4 °C (40°F)
Max Entering Air	37.8°C (100°F)	26.7°C (80°F)
Min. Entering Water	1.7°C (35°F)	60°C (140°F)
Max Entering Water	18.3°C (65°F)	93.3°C (200°F)
Min. Water Pressure	0 kpa (15 psig)	
Max Water Pressure	2068kpa (300 psig)	

⚠ CAUTION

The unit shall have proper sealing of the water piping entries into the unit. Failure to seal the entries may result in damage to the unit and property.

Packaged Direct Expansion (DX) Units

⚠ WARNING

COMPRESSOR CYCLING

3 MINUTE MINIMUM OFF TIME
To prevent motor overheating compressors must cycle off for a minimum of 3 minutes.

5 MINUTE MINIMUM ON TIME
To maintain the proper oil level compressors must cycle on for a minimum of 5 minutes.

The cycle rate must not exceed 7 starts per hour.

DX refrigeration system is factory assembled, leak tested, charged with refrigerant and run tested.

Refrigerant system includes an evaporator, condenser, liquid line filter drier, thermal expansion valve (TXV), and scroll compressor. Variable speed compressor systems include an electronic expansion valve (EEV). Compressor is equipped with a positive pressure forced lubrication system.

Never cut off the main power supply to the unit, except for servicing, emergency, or complete shutdown of the unit. When power is cut off from the unit crankcase heater cannot prevent refrigerant migration into the compressor. This means the compressor will cool down and liquid refrigerant may accumulate in the compressor. The compressor is designed to pump refrigerant gas and damage may occur when power is restored.

⚠ CAUTION

CRANKCASE HEATER OPERATION

Some units are equipped with a compressor crankcase heater, which must be energized at least 24 hours prior to cooling operation, to clear any liquid refrigerant from the compressor.

If power to the unit must be off for more than an hour, turn the thermostat system switch to "OFF", or turn the unit off at the control panel, and leave the unit off until the main power switch has been turned on again for at least 24 hours for units with compressor crankcase heaters. This will give the crankcase heater time to clear any liquid

accumulation out of the compressor before it is started.

Always control the unit from the thermostat, or control panel, never at the main power supply, except for servicing, emergency or complete shutdown of the unit.

During the cooling season, if the air flow is reduced due to dirty air filters or any other reason, the cooling coil can get too cold which will cause excessive liquid to return to the compressor. As the liquid concentration builds up, oil is washed out of the compressor, leaving it starved for lubrication.

The compressor life will be seriously shorted by reduced lubrication and the pumping of excessive amounts of liquid oil and refrigerant.

Note: Low Ambient Operation
Air-cooled DX units without a low ambient option, such as condenser fan cycling or the -17.8°C (0°F) low ambient option, will not operate in the cooling mode of operation properly when the outdoor temperature is below 12.8°C (55°F). Low ambient and/or economizer options are recommended if cooling operation below 12.8°C (55°F) is expected.

Note: Multiple Units with Multiple Thermostats
When several heating and cooling units are used to condition a space, all unit thermostat switches must be set in either heating mode, cooling mode or off. Do not leave part of the units switched to the opposite mode. Switch off cooling only units at the thermostat during the heating season.

Variable Capacity Compressor Controller

Units with variable capacity scroll compressors may include the following compressor controller. The following is an explanation of the terminals and troubleshooting alert flash codes of the controller. For more information on the compressor controller, see Emerson Climate Bulletin AE8-1328.

Note: When using field controls any variable capacity compressors must run at 100% for 1 minute when starting.

Figure 29 - Variable Capacity Compressor Controller

⚠ WARNING

To avoid damaging the Compressor Controller do not connect wires to terminals C3, C4, T3, T4, T5, or T6.

Low Voltage Terminals

24COM	Module Common
24VAC	Module Power
C1 & C2	Demand Input
P1	Pressure Common
P2	Pressure Input
P3	Pressure Power 5VDC
P4	Pressure Shield
P5 & P6	Pressure Output
T1 & T2	Discharge Temperature Sensor

High Voltage Terminals

A1 & A2	Alarm Relay Out
M1 & M2	Contactor
L1	Control Voltage N
L2	Control Voltage L
U1 & U2	Digital Unloader Solenoid
V1 & V2	Vapor Injection Solenoid

The compressor controller modulates the compressor unloader solenoid in an on/off pattern according to the capacity demand signal of the system. The following table shows the linear relationship between the demand signal and compressor capacity modulation. The compressor controller protects the compressor against high discharge temperature. Refer to Appendix B for the relationship between thermistor temperature readings and resistance values.

Table 20 - Demand Signal vs. Compressor Capacity Modulation

Demand Signal (VDC)	Loaded %	Unloaded %	Time Loaded	Time Unloaded	% Compressor Capacity
1.00	Off	Off	Off	Off	0%
1.44	10%	90%	1.5 sec	13.5 sec	10%
3.00	50%	50%	7.5 sec	7.5 sec	50%
4.20	80%	20%	12 sec	3 sec	80%
5.00	100%	0%	15 sec	0 sec	100%

LED Descriptions

Green LED - 24VAC Power
Yellow LED - Unloader Solenoid On
Red LED - ALERT Flash Code

- Flashing Green LED indicates anti-short cycle timer active
- All LEDs flashing at same rate indicates 24VAC supply too low for operation
- All LEDs solid at same time indicates controller failure
- Reset ALERT code or lockout by removing 24VAC supply to module
- All ALERTs close alarm relay contacts
- All ALERTs deenergize contactor and solenoids except Code 6
- Compressor always unloads for 0.1 second at startup
- Compressor only starts when Demand signal input is above 1.45 VDC and no ALERTs are present

Troubleshooting ALERT Flash Codes

Code 1 Reserved for future use

Code 2 High Discharge Temperature
Discharge thermistor above trip set point or thermistor short circuited.
Resets after 30 minutes and motor cools down.
If 5 events occur within 4 hours, the compressor is locked out.

Code 3 Compressor Protector Trip
No compressor current is detected when compressor should be running.
Resets when compressor current is detected.

Code 4 Locked Rotor
Locked rotor condition is detected. Compressor is locked out.

Code 5 Demand Signal Loss
Demand input signal is below 0.5VDC. Resets after demand input signal rises above 1.0VDC.

Code 6 Discharge Thermistor Fault
Thermistor is not connected. Reset by reconnecting thermistor.

Code 7 Reserved for future use

Code 8 Compressor Contactor Fault
Compressor current is detected when compressor should be off. Resets when current is no longer detected.

Code 9 Low 24VAC Supply
Supply voltage to module has dropped below 18.5VAC. Resets after voltage rise above 19.5VAC.

Figure 30 - Compressor Controller Flash Code Details

Evaporator Coil

⚠ WARNING

Electric shock hazard. Shut off all electrical power to the unit to avoid shock hazard or injury from rotating parts.

Removal
Evacuate refrigerant from the systems.

Remove the TXV bulbs from the suction lines. Disconnect the suction and liquid line copper connections to the evaporator coil.

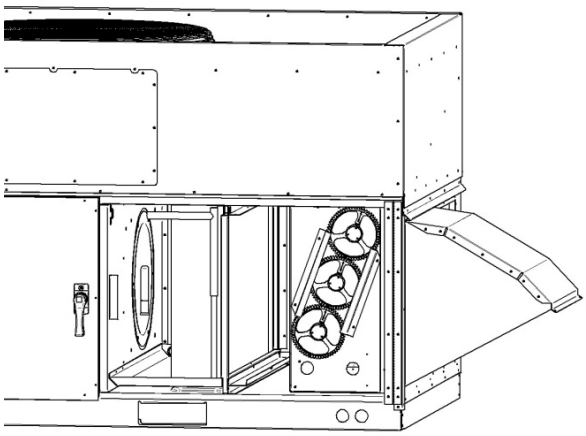

Figure 31 - Evaporator Coil Access

Remove screws attaching filter rack to the evaporation coil at the front and back of the coil. It may be necessary to remove the economizer assembly (if equipped) to access the screws at the back.

Slide the evaporator coil straight out of the unit.

It may be necessary to make a vertical cut in the front flange of the drain pan on either side of the coil and bend the flange down between the cuts to remove the evaporator coil.

Reinstallation
Slide the new coil into the unit through the notch cut in the front of the drain pan.

Re-bend the cut flange back to the original position, then seal the cuts with polyurethane caulking.

Attach the filter at the front and back of the evaporation coil. Reinstall economizer assembly if necessary.

Connect the suction and liquid copper connections to the evaporator coil. Reinstall the TXV bulb on the suction line.

Evacuate the refrigerant system. Weigh in the nameplate refrigerant charge.
See Adjusting Refrigerant Charge section to check for proper sub-cooling and superheat of the refrigerant systems.

Condenser Fan

⚠ WARNING

Electric shock hazard. Shut off all electrical power to the unit to avoid shock hazard or injury from rotating parts.

⚠ WARNING

Improper installation, adjustment, alteration, service, or maintenance can cause property damage, personal injury, or loss of life. Startup and service must be performed by a Factory Trained Service Technician.

Removal
Take off the fan grill by removing the screws that attach it to the top of the unit.

Disconnect the wiring from the motor and loosen the bolt that clamps the motor mount to the motor. Remove the motor and fan through the top of the orifice.

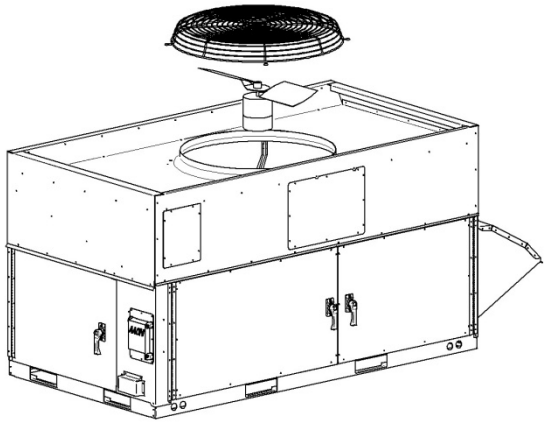

Figure 32 - Removal of a Condenser Fan Assembly

Reinstallation

Set the motor back into the motor mount and tighten bolt. Adjust fan until the top of the blade is even with the top of the orifice.

Reconnect wires, then attach the fan grill at all the points where screws were removed.

Refrigerant-to-Water Heat Exchanger

Condenser water pump, condenser water piping, cooling tower or geothermal loop, pressure gauges, strainers, piping insulation and all components of the waterside piping must be field installed.

Water-Source Heat Pump Applications

Water-source heat pump units using 100% outside air must have electric preheat if the application has a potential for operation with air entering the indoor coil below 6.1°C (43°F) with a water loop temperature of 21.1°C (70°F).

⚠ CAUTION

WATER-SOURCE HEAT PUMP APPLICATIONS

Water-source heat pump units using 100% outside air must have electric preheat if the application has a potential for heat pump heating operation with air entering the indoor coil below 6.1°C (43°F) with an entering water loop temperature of 21.1°C (70°F).

Open Loop Applications

This product contains one or more refrigerant-to-water heat exchangers made of copper, which is subject to corrosion and failure when exposed to chlorides.

⚠ WARNING

OPEN LOOP APPLICATIONS

Failure of the condenser as a result of chemical corrosion is excluded from coverage under AAON Inc. warranties and the heat exchanger manufacturer's warranties.

Do not allow water containing any form of chlorides to enter this heat exchanger.

Common forms of chlorides include:

1. Sea water mist entering an open cooling tower system.
2. Contaminated make-up water containing salt water.
3. Disinfecting the water loop with solutions containing sodium hypochlorite.

Chlorides will result in a premature failure of the condenser.

Failure of the condenser as a result of chemical corrosion is excluded from coverage under AAON warranties and the heat exchanger manufacturer warranties.

Failure of the condenser will allow water to enter the refrigerant circuit and will cause extensive damage to the refrigerant circuit components. Any damage to the equipment as a result of condenser failure from chemical corrosion due to the fluid in the condenser is excluded from coverage under AAON warranties and the heat exchanger manufacturer warranties.

⚠ WARNING

OPEN LOOP APPLICATIONS

Cupronickel refrigerant-to-water heat exchangers must be used with all open loop applications. Failure to use a Cupronickel heat exchanger may result in premature failure of your system and possible voiding of the warranty.

⚠ CAUTION

Cleaning the cooling tower or condenser water loop with harsh chemicals such as hydrochloric acid (muriatic acid), chlorine or other chlorides, can damage the refrigerant-to-water heat exchanger. Care must be taken to avoid allowing chemicals to enter the refrigerant-to-water heat exchanger. See Appendix A - Heat Exchanger Corrosion Resistance for more information.

Freezing Water in the Heat Exchanger

This product contains one or more refrigerant-to-water heat exchangers. A refrigerant-to-water heat exchanger contains refrigerant in one passage and water in another passage. Water is subject to freezing at 0°C (32°F). When water freezes in a heat exchanger significant forces are exerted on the components of the heat exchanger where the water is confined.

Failure of the condenser due to freezing will allow water to enter the refrigerant circuit and will cause extensive damage to the refrigerant circuit components. Any damage to the equipment as a result of water freezing in the condenser is excluded from coverage under AAON warranties and the heat exchanger manufacturer warranties.

Unit is capable of operating with Entering Water Temperatures (EWT) as low as 13.9°C (57°F), during the cooling mode, without the need for head pressure control. If the EWT is expected to be lower than 13.9°C (57°F) or a more stable operation is desired, a factory provided head pressure control water valve option is available.

⚠ WARNING

WATER FREEZING

Failure of the condenser due to freezing will allow water to enter the refrigerant circuit and will cause extensive damage to the refrigerant circuit components. Any damage to the equipment as a result of water freezing in the condenser is excluded from coverage under AAON warranties and the heat exchanger manufacturer warranties.

Glycol solution must be used if ambient temperatures are expected to fall below freezing or if the loop entering water temperature to the unit is below 10°C (50°F) while operating in the heating mode (heat pump units only). Adding glycol to condenser water causes an increase in pressure drop and also results in a decrease in unit performance. A minimum concentration of 20% glycol solution is recommended.

Table 21 - Glycol Concentration Freezing Points

% Glycol	Ethylene Glycol [°C (°F)]	Propylene Glycol [°C (°F)]
0	0 (32)	0 (32)
20	-7.8 (18)	-7.2 (19)
30	-13.9 (7)	-12.8 (9)
40	-21.7 (-7)	-21.1 (-6)
50	-33.3 (-28)	-32.8 (-27)

Water loop piping that runs through unheated areas or outside the building must be insulated.

Never operate the unit in heat pump mode with a saturated suction temperature below 1.7°C (35°F) for pure water systems or below the freezing point +(-16.1°C [3°F]) of the aqueous solution of water and glycol.

Water Piping

Verify that a water flow switch is installed between the condenser water supply and return connections. This sensor provides a signal to the unit controller that water flow is present in the refrigerant-to-water heat exchanger and the unit can operate without damaging unit components.

⚠ WARNING

WATER PRESSURE

Prior to connection of condensing water supply, verify water pressure is less than maximum pressure shown on unit nameplate. To prevent injury or death due to instantaneous release of high pressure water, relief valves must be field supplied on water piping. Supply water connection may require a backflow preventer to prevent supply makeup water from backing up into the public water system.

Table 22 - Condenser Water Connections

Model (RQ-)	Supply and Return Connection Size
002	3/4” Sweat
003, 004, 005, 006	1” Sweat

Note: 3/4” = 19mm, 1” = 25 mm

Only use approved water pipe material. Avoid using galvanized material for water lines/fittings as the material is corrosive and may cause fouling of the water system.

⚠ CAUTION

PVC (Polyvinyl Chloride) and CPVC (Chlorinated Polyvinyl Chloride) are vulnerable to attack by certain chemicals. Polyolester (POE) oils used with R-410A and other refrigerants, even in trace amounts, in a PVC or CPVC piping system will result in stress cracking of the piping and fittings and complete piping system failure.

Condenser water pump must be field sized and installed between the cooling

tower/geothermal loop and self-contained unit. System must be sized in accordance with the ASHRAE Handbook. Use engineering guidelines to maintain equal distances for supply and return piping and limit bend radii to maintain balance in the system. Balancing valves, permanent thermometers and gauges may be required.

⚠ CAUTION

WATER PIPING

Follow national and local codes when installing water piping. Connections to the unit must incorporate vibration eliminators to reduce noise and vibration and shutoff valves to facilitate servicing. Supply and return water piping must be at least as large as the unit connections and larger depending on length of runs, rise and bends.

Before connection to the unit the condenser water system must be flushed to remove foreign material that could cause condenser fouling. Install a screen strainer with a minimum of 20 Mesh ahead of the condenser inlet to prevent condenser fouling and internal tube damage.

Mineral content of the condenser water must be controlled. All make-up water has minerals in it and as the water is evaporated in the cooling tower, these minerals remain. As the mineral content of the water increases, the conductivity of the water increases.

Field provided and installed water treatment program must be compatible with stainless steel, copper, aluminum, ABS plastic, and PVC. Batch feed processes must never be used as concentrated chemicals can cause corrosion. Never use hydrochloric acid (muriatic acid) or chlorine as it will corrode stainless steel.

⚠ CAUTION

Each heat exchanger is equipped with a refrigerant pressure relief device to relieve pressure should excessive condensing pressures (>4.65 kpa [675 psig]) occur. Codes may require a qualified technician to connect and route relief piping outdoors. The relief valve has a 16mm (5/8”) male flare outlet connection.

NOTE: Ball valves must be installed in the condenser water supply and return lines for unit isolation and water flow balancing. All manual flow valves must be of the ball valve design. Globe or gate valves must not be used due to high pressure drops and poor throttling characteristics.

Pressure and temperature ports are recommended in condenser water supply and return lines for system balancing. These openings must be 5 to 10 pipe diameters from the unit water connections. To allow for mixing and temperature stabilization, wells in the water piping must extend at least 1/2 pipe diameter into the pipe.

⚠ CAUTION

A qualified technician is responsible for properly sizing and installing water system components. Improper fluid flow due to valves, piping, or improper pump operation may result in unacceptable unit operation and void warranty.

Piping systems must not exceed 3.1 m/s (10 ft/sec) fluid velocity to ensure tube wall integrity and reduce noise.

Energy Recovery Units

⚠ WARNING

Improper installation, adjustment, alteration, service or maintenance can cause property damage, personal injury or loss of life. Startup and service must be performed by a Factory Trained Service Technician.

General Information

AAONAIRE® units have been equipped with an energy recovery wheel. This section is provided to assure the energy recovery feature will be properly setup to perform in accordance with the job specifications for your particular application.

1. Removable Segment (NA for monolith)
2. Permanent Tension Belt
3. Pulley
4. Embedded Segment Stiffeners (NA for monolith)
5. Segment Retaining Latches (NA for monolith)
6. Bearing Beam and Bearing Access Cover Plate (Diameter Seals are behind Bearing Beam on both sides)
7. Adjustable Purge
8. Motor

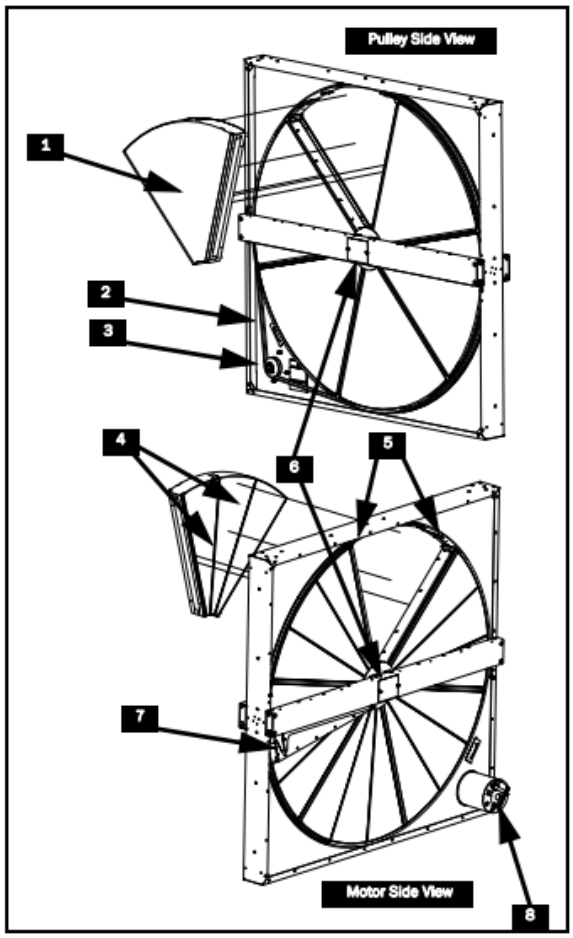

Energy Recovery Wheel

The Energy Recovery Cassette consists of a frame wheel, wheel drive system, and energy transfer segments. Segments are removable for cleaning or replacement. The segments rotate through counter flowing exhaust and outdoor air supply streams where they transfer heat and/or water vapor from the warm, moist air stream to the cooler and/or drier air stream.

The initial setup and servicing of the energy recovery wheel is very important to maintain proper operation efficiency and building occupant comfort.

Normal maintenance requires periodic inspection of filters, the cassette wheel, drive belts, air seals, wheel drive motor, and its electrical connections.

Wiring diagrams are provided with each motor. When wired according to wiring diagram, energy recovery wheel rotates clockwise when viewed from the shaft/pulley side.

By carefully reviewing the information within this section and following the instructions, the risk of improper operation and/or component damage will be minimized.

It is important that periodic maintenance be performed to help assure trouble free operation.

Initial Mechanical Check and Setup
Outdoor units equipped with outside air intake will have an outside air hood. The outside air hood must be opened prior to unit operation.

Outdoor air intake adjustments must be made according to building ventilation, or local code requirements.

After the unit installation is complete, open the cassette access door and determine that the energy wheel rotates freely when turned by hand with no interference noise. Apply power and observe that the wheel rotates at approximately 45-50 RPM. If the wheel does not rotate when power is applied, it may be necessary to readjust the "diameter air seals".

Air Seal Adjustments
Pile type air seals across both sides of the energy wheel diameter are factory adjusted to provide close clearance between the air seal and wheel.

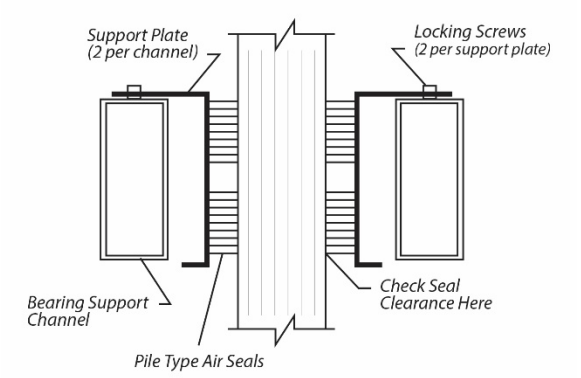

Cross Section of Air Seal Structure

Racking of the unit or cassette during installation, and/or mounting of the unit on a non-level support or in other than the factory orientation can change seal clearances. Tight seals will prevent rotation.

Wheel to Air Seal Clearance
To check wheel to seal clearance; first disconnect power to the unit, in some units the energy recovery wheel assembly can be pulled out from the cabinet to view the air seals. On larger units, the energy recovery wheel may be accessible inside the walk-in cabinet.

A business card or two pieces of paper can be used as a feller gauge, (typically each .1 mm [.004"] thick) by placing it between the face of the wheel and pile seal.

Using the paper, determine if a loose slip fit exist between the pile seal and wheel when the wheel is rotated by hand.

To adjust air seal clearance, loosen all seal plate retaining screws holding the separate seal retaining plates to the bearing support channels and slide the seals plates away from the wheel. Using the paper feeler gauge, readjust and retighten one seal plate at a time to provide slip fit clearance when the wheel is rotated by hand.

Confirm that the wheel rotates freely. Apply power to the unit and confirm rotation. Visually inspect the belt and ensure the belt is tracking near the center of the rim. Verify the wheel speed is approximately 45-50 RPM. Confirm there is no excessive noise such as scraping, brushing, or banging.

Set Purge Angle (if included)
When installed, the purge angle is factory set to 5 degrees. If a different angle is required, complete the following steps to adjust the purge:

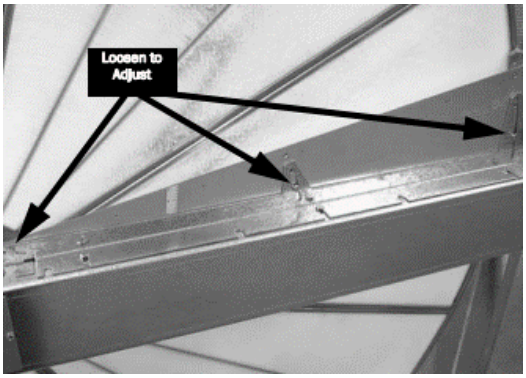

1. Loosen the three purge adjusting screws.
2. Adjust purge sector to the specified angle.

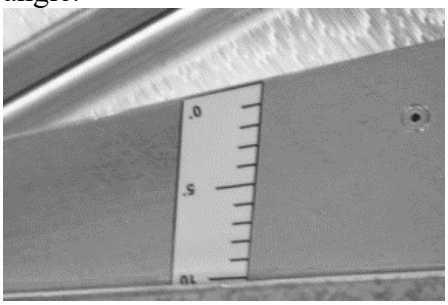

3. Tighten the purge adjusting screws.
4. Turn the wheel by hand clockwise (when viewed from pulley side) to check for interference.

Check Purge Seal
If a purge is installed, check for a slight interference fit between the seal and the face of the wheel by sliding a piece of paper ("feeler gauge") between the seal and the media a multiple locations along the purge seal as you rotate the wheel slowly by hand (clockwise when viewed from the pulley side). Verify that the media slightly grabs the paper during rotation.

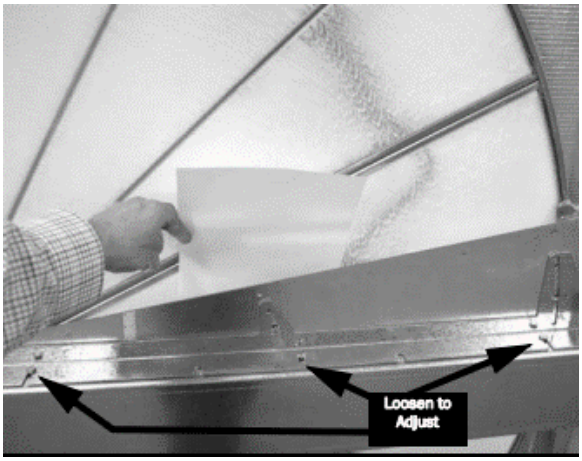

If it is necessary to adjust a purge seal to the face of the wheel, loosen the two or three screws along the bearing beam and adjust to the proper distance from the media surface. Tighten the screws and retest the seal.

Airflow Balancing and Checking
High performance systems commonly have complex air distribution and fan systems. Unqualified personnel must not attempt to adjust fan operation, or air circulation, as all systems have unique operations characteristics. Professional air balance specialists must be employed to establish actual operating conditions, and to configure the air delivery system for optimal performance.

Controls
A variety of controls and electrical accessories may be provided with the equipment. Identify the controls on each unit by consulting appropriate submittal, or order documents, and operate according to the control manufacturer's instructions. If you cannot locate installation, operation, or

maintenance information for the specific controls, then contact your sales representative, or the control manufacturer for assistance.

⚠ WARNING

Do not alter factory wiring. Deviation from the supplied wiring diagram will void all warranties, and may result in equipment damage or personal injury. Contact the factory with wiring discrepancies.

Routine Maintenance and Handling
Handle cassettes with care. All cassettes must be lifted by the bearing support beam. Holes are provided on both sides of the bearing support beams to facilitate rigging as shown in the following illustration.

Routine maintenance of the Energy Recovery Cassettes includes periodic cleaning of the Energy Recovery Wheel as well as inspection of the Air Seals and Wheel Drive Components as follows:

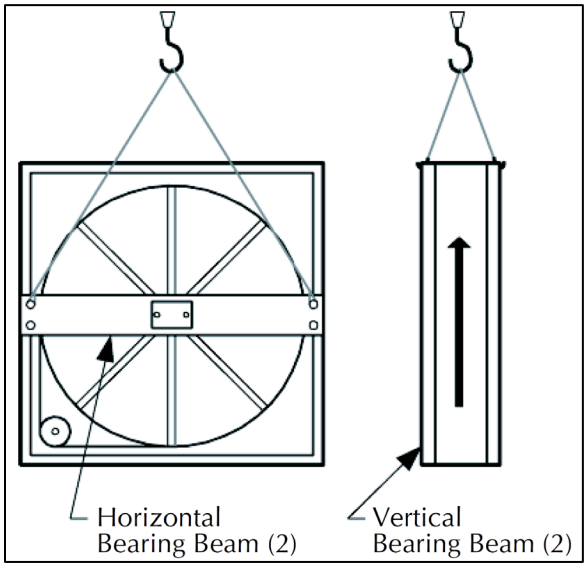

Lifting Hole Locations

Energy Recovery Wheel General Cleaning
Cleaning the energy transfer media will help maintain optimal performance. The frequency of cleaning is largely dependent on the application and air quality. Use ASHRAE's Classes of Air categories, to create a routine cleaning schedule.

Class 1 air has low contaminant concentration with inoffensive odor and sensory irritation intensity.
Class 2 air has moderate contaminant concentration, with mildly offensive odors or sensory-irritation intensity.
Class 3 air has significant contaminant concentration and significant offensive odor or sensory-irritation intensity.
Class 4 air has highly objectionable fumes or gases and potentially contains dangerous particles, bio-aerosols, or gases at a concentration high enough to be considered harmful, not suitable for recirculation or transfer to any other space.

Table 23 – Energy Recovery Wheel Cleaning Frequency

Class of Air	Examples	Cleaning Frequency
Class 1 Clean Air	• Offices • Classrooms • Assembly rooms • Churches	Every 8-10 years
Class 2 Moderately Clean Air	• Restrooms • Swimming pools • Dining rooms • Locker rooms • Warehouse • Dorms	Every 4-6 years
Class 3 Dirty Air	• Kitchens • Dry cleaners • Beauty salons • Laboratories • Pet shops	Every 1-2 years
Class 4 Contaminated Air	• Paint spray booths • Laboratory fume exhaust • Kitchen grease exhaust	Do not use in this application

The energy recovery wheel is "self-cleaning" with respect to dry particles due to its laminar flow characteristics. Smaller particles pass through; larger particles land on the surface and are blown clear as the flow direction is reversed. Any material that builds up on the face of the wheel can be removed with a brush or vacuum. The primary need for cleaning is to remove oil based aerosols that have condensed on energy transfer surfaces.

A characteristic of all dry desiccants, such films can close off micron sized pores at the surface of the desiccant material, reducing the efficiency by which the desiccant can adsorb and desorb moisture and also build up so as to reduce airflow.

In a reasonably clean indoor environment such as a school or office building, measurable reductions of airflow or loss of sensible (temperature) effectiveness may not occur for several years. Measurable changes in latent energy (water vapor) transfer can occur in shorter periods of time in applications such as moderate occupant smoking or cooking facilities. In applications experiencing unusually high levels of occupant smoking or oil based aerosols such as industrial applications involving the ventilation of machine shop areas for example, annual washing of energy transfer may be necessary to maintain latent transfer efficiency. Proper cleaning of the energy recovery wheel will restore latent effectiveness to near original performance.

To clean, gain access to the energy recovery wheel and remove segments. Brush foreign material from the face of the wheel. Wash the segments or small wheels in a 5% solution of non-acid based coil cleaner or alkaline detergent and warm water.

⚠ CAUTION

Do not use acid based cleaners, aromatic solvents, steam or temperatures in excess of 76.7°C (170°F)damage to the wheel may occur!

WARNING: Monolithic wheels with internal bearings must not be soaked to avoid corroding bearing.

(Note: some staining of the desiccant may remain and is not harmful to performance). Before removing, rapidly run finger across surface of segment to separate polymer strips for better cleaning action. Rinse dirty solution from segment and remove excess water before reinstalling in wheel.

Air Seals

Four adjustable diameter seals are provided on each cassette to minimize transfer of air between the counter flowing airstreams.

To adjust diameter seals, loosen diameter seal adjusting screws and back seals away from wheel surface. Rotate wheel clockwise until two opposing spokes are hidden behind the bearing support beam. Using a folded piece of paper as a feeler gauge, position paper between the wheel surface and diameter seals.

Adjust seals towards wheel surface until a slight friction on the feeler gauge (paper) is detected when gauge is moved along the length of the spoke. Retighten adjusting screws and recheck clearance with "feeler" gauge.

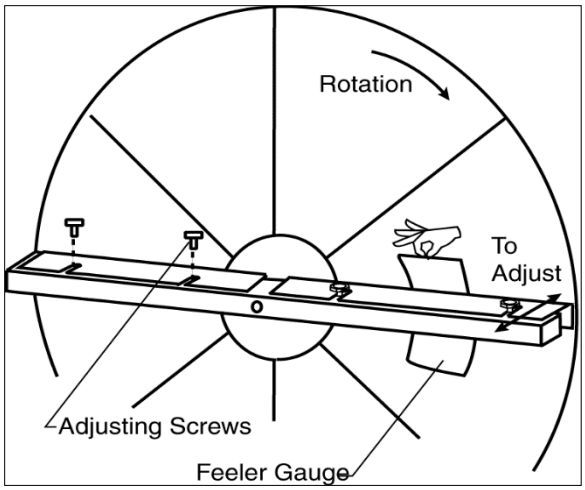

Diameter Seal Adjustment

Wheel Drive Components

The wheel drive motor bearings are pre-lubricated and no further lubrication is necessary.

The wheel drive pulley is secured to the drive motor shaft by a combination of either a key or D slot and set screw.

The set screw is secured with removable locktite to prevent loosening. Annually confirm set screw is secure. The wheel drive belt is a urethane stretch belt designed to provide constant tension through the life of the belt. No adjustment is required. Inspect the drive belt annually for proper tracking and tension. A properly tensioned belt will turn the wheel immediately after power is applied with no visible slippage during start-up.

Installation Considerations

Energy recovery cassettes are incorporated within the design of packaged units, packaged air handlers and energy recovery ventilators. In each case, it is recommended that the following considerations be addressed:

Accessibility
The cassette and all its operative parts; i.e.: motor, belt, pulley, bearings, seals and energy transfer segments must be accessible for service and maintenance. This design requires that adequate clearance be provided outside the enclosure. Where cassettes are permanently installed in a cabinet, access to both sides of the cassette must be provided.

Orientation & Support
The Energy Recovery Cassette may be mounted in any orientation. However, Care must be taken to make certain that the cassette frame remains flat and the bearing beams are not racked.

To verify, make certain that the distance between wheel rim and bearing beam is the same at each end of the bearing beam, to within .64 cm (1/4 of an inch) (dimension A & B). This amount of racking can be compensated for by adjusting the diameter seals.

If greater than .64 cm (1/4 of an inch) (dimension C), racking must be corrected to ensure that drive belt will not disengage from wheel.

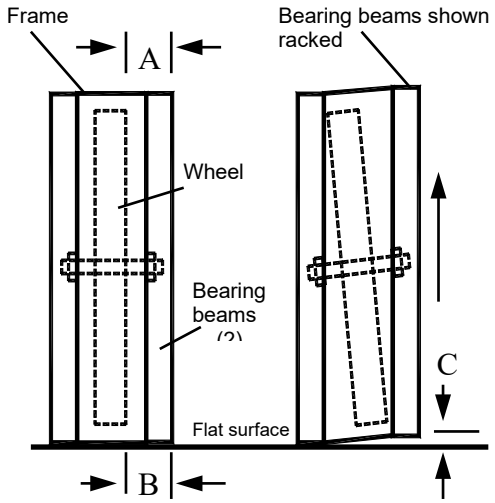

Avoid Racking of Cassette Frame

Operation

⚠ CAUTION

Keep hands away from rotating wheel! Contact with rotating wheel can cause physical injury.

Startup Procedure

1. By hand, turn wheel clockwise (as viewed from the pulley side), to verify wheel turns freely through 360º rotation.
2. Before applying power to drive motor, confirm wheel segments are fully engaged in wheel frame and segment retainers are completely fastened. (See Segment Installation Diagram).
3. With hands and objects away from moving parts, activate unit and confirm wheel rotation. Wheel rotates clockwise (as viewed from the pulley side).
4. If wheel has difficulty starting, turn power off and inspect for excessive interference between the wheel surface and each of the four (4) diameter seals. To correct, loosen diameter seal adjusting screws and back adjustable diameter seals away from surface of wheel, apply power to confirm wheel is free to rotate, then re-adjust and tighten hub and diameter seals, as shown in hub seal adjustment diagram.
5. Start and stop wheel several times to confirm seal adjustment and to confirm belt is tracking properly on wheel rim (approximately .64 cm [1/4 of an inch] from outer edge of rim).

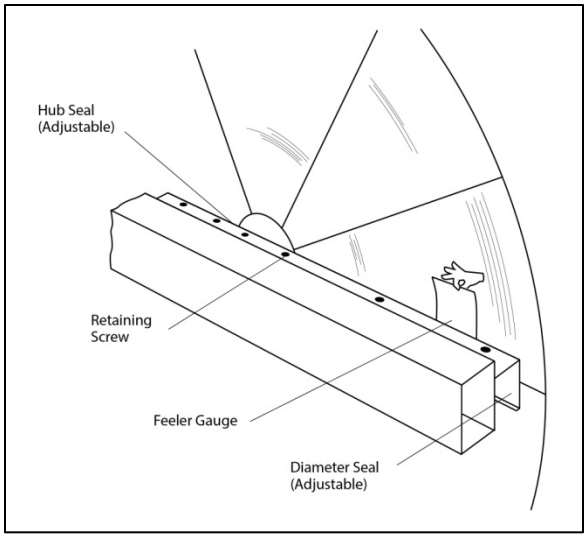

Hub Seal Adjustment

Service

⚠ CAUTION

Disconnect electrical power before servicing energy recovery cassette. Always keep hands away from bearing support beam when installing or removing segments. Failure to do so could result in severe injury to fingers or hand.

Wheel Removal & Installation

To remove the wheel, follow these steps

1. Disconnect power to the wheel
2. If possible, remove wheel frame from cabinet.
3. If a beam is present on the pulley side, remove the mounting screw from each end of the beam.

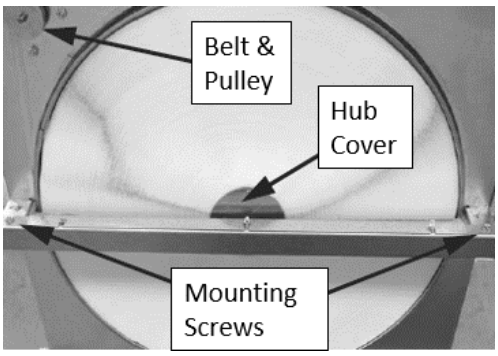

4. Remove the beam.
5. Remove the two hub cover screws
6. Remove center screw from the end of the wheel shaft

7. Remove the belt from the wheel
8. Remove the wheel from the frame.
9. To install the wheel, complete the previous 8 steps in reverse order.
10. Turn wheel clockwise by hand (when viewed from the pulley side) and check operation.
11. Replace frame in cabinet and apply power to system.
12. Observe the wheel operating under power.

Wheel Drive Motor and Pulley Replacement

1. Disconnect power to wheel drive motor.
2. Remove belt from pulley and position temporarily around wheel rim.
3. Loosen set screw in wheel drive pulley using a hex head wrench and remove pulley from motor drive shaft.
4. While supporting weight of drive motor in one hand, loosen and remove (4) mounting bolts.
5. Install replacement motor with hardware kit supplied.
6. Install pulley to dimension as shown and secure set screw to drive shaft.
7. Stretch belt over pulley and engage in groove.
8. Follow start-up procedure.

Belt Replacement

1. Obtain access to the pulley side bearing access plate if bearing access plates are provided. Remove two bearing access plate retaining screws and the access plate.
2. Using hexagonal wrench, loosen set screw in bearing locking collar. Using light hammer and drift (in drift pin hole) tap collar in the direction of wheel rotation to unlock collar. Remove collar.
3. Using socket wrench with extension, remove two nuts which secure bearing housing to the bearing support beam. Slide bearing from shaft. If not removable by hand, use bearing puller.
4. Form a small loop of belt and pass it through the hole in the bearing support beam. Grasp the belt at the wheel hub and pull the entire belt down.

Note: Slight hand pressure against wheel rim will lift weight of wheel from inner race of bearing to assist bearing removal and installation.

⚠ CAUTION

Protect hands and belt from possible sharp edges of hole in Bearing Support Beam.

5. Loop the trailing end of the belt over the shaft (belt is partially through the opening).
6. Reinstall the bearing onto the wheel shaft, being careful to engage the two locating pins into the holes in the bearing support beam. Secure the bearing with two self-locking nuts.
7. Install the belts around the wheel and pulley according to the instructions provided with the belt.
8. Reinstall diameter seals or hub seal and tighten retaining screws. Rotate wheel in clockwise direction to determine that wheel rotates freely with slight drag on seals.
9. Reinstall bearing locking collar. Rotate collar by hand in the direction the wheel rotates (see label provided on each cassette for wheel rotation).
10. Lock in position by tapping drift pin hole with hammer and drift. Secure in position by tightening set screw.
11. Reinstall Bearing Access Cover.
12. Apply power to wheel and ensure that the wheel rotates freely without interference.

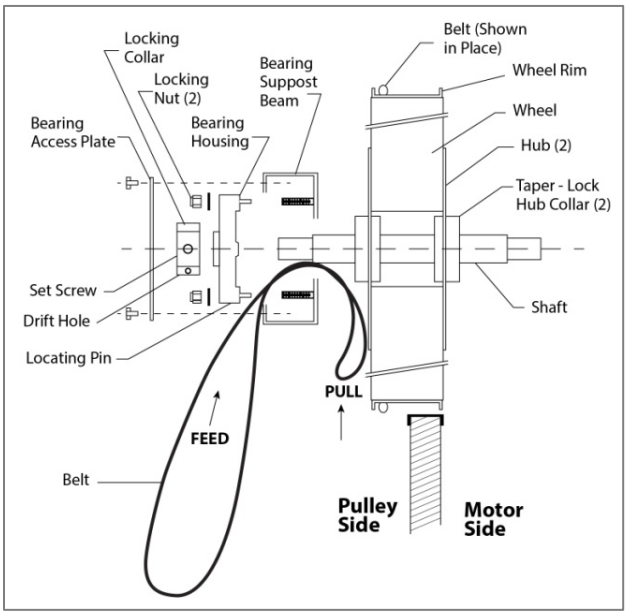

Belt Replacement

Gas or Electric Heating

The unit is designed to heat a given amount of air while operating. If this amount of air is greatly reduced, approximately 1/3 during the heating season, the gas heat exchanger or electric heating coil may overheat, and may cut the burner or heater off entirely by action of the safety high temperature limit devices which are factory mounted at the heat exchanger and supply fan areas.

Airflow must be adjusted after installation to obtain an air temperature rise within the range specified on the unit rating plate at the required external static pressure.

If overheating occurs with a gas heat exchanger, or the gas supply fail to shut off, shut off the manual gas valve to the furnace before shutting off the electrical supply.

Prolonged overheating of the heat exchanger will shorten its life.

If unit has not been selected as a 100% outside air unit (makeup air unit) the return air duct must be sealed to the unit and the return air temperature must be maintained between 12.8°C (55°F) and 26.7°C (80°F).

Table 24 - Electric and Gas Heating Capacities

Model Option B2	Gas Heat Input Capacity	Gas Heat Output Capacity	Electric Heat Capacity	
	MBH	MBH	kW (208V)	kW (230V, 380V , 460V, 575V)
1 = *Heat 1*	60.0	48.6	7.5	10
2 = *Heat 2*			15.0	20
3 = *Heat 3*	100.0	81.0	22.5	30
4 = *Heat 4*			30.0	40
5 = *Heat 5*	140.0	113.4		
6 = *Heat 6*				
7 = *Heat 7*	160.0	129.6		

Table 25 - Auxiliary Electric Heating Capacities

Feature 3	kW (208V)	kW (230V, 380V 460V, 575V)
***K** = *Heat K*	7.5	10.0
***L** = *Heat L*	15.0	20.0
***M** = *Heat M*	22.5	30.0
***N** = *Heat N*	30.0	40.0

Electric Preheat

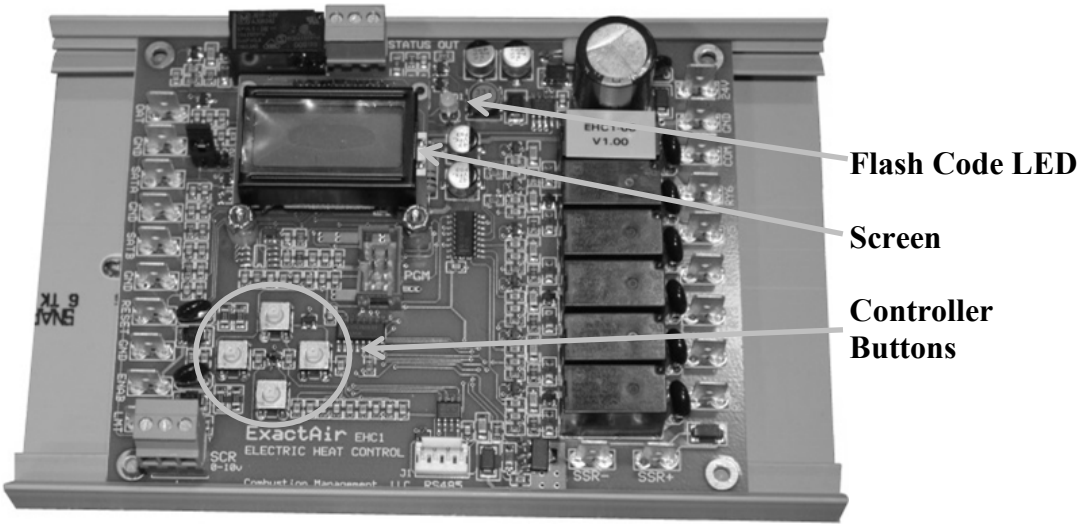

Figure 33 - Preheat Controller

The electric preheat controller is factory installed within the preheat cabinet. The following details are for EHC1 version 1.10 of the preheat controller.

Status Display Screens
These screens are access by pressing either the left or right controller buttons and scrolling through the following displays.

1. **LAT** - Measured leaving air temperature (LAT), average of LAT A and B probes. **MOD** - Modulation rate % currently being applied to stage one SCR.

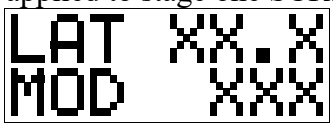

2. **WKGset** - "Working" LAT setpoint (°F) (LATeet>>RESETset as adjusted by 0-10V RESET signal).

3. **LATset** - Leaving air temperature (°F) control setpoint.

4. **RESETset** - "Reset" air temperature (°F) control setpoint.

5. **OATset** - Outside air temperature (°F) control setpoint, measured outside temperature must be less to enable preheat.

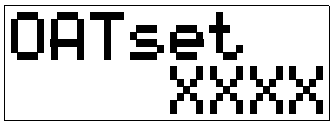

6. **LLTset** - “Low Limit Time” temperature (°F) setpoint. If this temperature is not reached at full output, relay will pull in.

```
LLTset
     XXXX
```

7. **Stage** - Current operating stage 1-6.

```
Stage
  X of X
```

8. **Stage** - Current operating stage 1-6.
   MOD - Modulation rate % being applied to stage one heat strip SCR.

```
Stage  X
MOD   XX
```

9. **OAT** - Outside air inlet temperature (°F).

```
OAT
    XXX.X
```

10. **LATA** - Leaving air probe "A" temperature (°F).

```
LATA
     XX.X
```

11. **LATB** - Leaving air probe "B" temperature (°F).

```
LATB
     XX.X
```

12. **ManSTG** - Manual override stage for system testing. Any override automatically cancels after ten minutes; 0 indicates normal operation, 1-6 corresponds to stages 1-6 being forced on. Stage 1, the SCR, is forced to 50%.

```
ManSTG
         X
```

System Setting Screens

These screens are access by pressing the up button and then entering the technician password **2425**. The screens are scrolled through by pressing either right or left buttons on the controller. Adjustment is made by pressing the up and down buttons. After a short time of inactivity, the screen will go back to the Status Display Screens.

1. **StartDly** - Seconds of delay after the 'Enable' call before heating starts. This is to allow the Supply Fan to come up to speed. Supply Fan VFD’s have a 45 second ramp up time. Range = 1sec-60sec, and the default is 15sec.

```
StartDly
0015
```

2. **BelowLLT** - "Below Low Limit Time". Range = 10sec-1800sec, and the default is 10sec. If ‘LLTset’ temperature is not reached within ‘BelowLLT’ after reaching full output, the status relay will operate.

```
BelowLLT
0010
```

3. **Stages** - Number of stages. Range = 1-6, and the default is 1. The number of stages can be determined using Table 25.

```
Stages
0001
```

Table 26 - Stages of Electric Preheat

Tonnages	Feature 14B	Stages
RQ 2-6 tons	G = 10 kW	1
	H = 15 kW	
	J = 20 kW	

4. **LATset** - Leaving air temperature setpoint. Range = 35°F-80°F, and the default is 50°F.

```
LATset
0050
```

5. **OATset** - Outside air temperature setpoint. Range = 35°F-60°F, and the default is 35°F.

```
OATset
0035
```

6. **LLTset** - "Low Limit Time" temperature setpoint. Range = 35°F-50°F, and the default is 35°F. If 'LLTSet' temperature is not reached within 'BelowLLT' time after reaching full output, the status relay will operate.

```
LLTset
0035
```

7. **RESETset** - "Reset Setpoint" temperature. Range = 35°F-80°F, and the default is 50°F.

```
RESETset
0050
```

8. **ManSTG -** Temporary manual override a specified stage testing, 0=normal operation, 1-6 to override corresponding stages. Range = 0-6, and the default is 0. The manual override may be used for unit testing of each stage. Stage 1 will be at 50% to test SCR and stages 2-6 will be full capacity. A manual override will expire in ten minutes if not manually cancelled by resetting 'ManSTG' back to zero.

```
ManSTG
0000
```

LED Flash Alarm Codes

The flashing red LED will be to the right of the screen. The number of blinks is described below. The LCD screen will also display the screens.

1 = LATA probe open/short

```
FLT: LAT
Probe A
```

2 = LATB probe open/short

```
FLT: LAT
Probe B
```

3 = OAT sensor open/short

```
FLT: OAT
Probe
```

4 = Leaving air temp over limit

```
FLT: LAT
Hi Limit
```

5 = Cooling down after hi limit' event

```
Hi LAT
Cooldown
```

6 = LAT below low limit

```
LATbelow
Lo Limit
```

7 = Stage 1 only recovery after mechanical limit

```
Mech Lmt
Recovery
```

8 = Shutdown after too many hi limit events

```
Mech Lmt
Shutdown
```

9 = Short or overload on the 0-10VDC analog signal output

```
FLT: SCR
0-10 Sig
```

Operation
Controller receives 24VAC preheat enable

Controller evaluates if outside air temperature "OAT" is below setpoint 'OATset'

If OAT < 'OATset', controller will delay heating startup by time setpoint 'STARTDLY', then stage up preheat to maintain the setpoint 'LATset' to a maximum number of stages set in setpoint 'Stages'.

If a safety is reached with the controller's safety sensors then the electric preheat will be de-energized for a period of 2 minutes. Electric preheat will turn on stage one at 100% for 3 minutes to test if fault conditions still exist after the cool down period. The controller will repeat this and if 3 trips are recorded in 60 minutes then the controller will lockout and require manually cycling power to reset.

The modulating electric preheat option is designed to temper the incoming outside air to the unit based on an enable control signal and the outside air conditions.

A 24VAC enable signal must be provided to the [PHE] terminal to enable the operation of the electric preheat. Once the preheat controller is enabled it will monitor the outside air temperature to determine if any capacity of preheat is needed. If the outside air temperature falls below the outside air temperature setpoint the electric preheat will be started up and maintain the leaving air temperature setpoint with both SCR controlled and staged electric preheat. Both setpoints are set with push button LCD interface on the preheat controller. Outside air temperature sensors and preheat discharge supply air temperature sensors are factory installed and wired to the preheat controller. Electric preheat has maximum operating outside air temperature of 15.6°C (60°F) and a maximum preheat discharge air temperature of 26.7°C (80°F).

[COM], [PHO] & [PHC] feedback terminals are provided to communicate if the electric preheat is in operation. PHO is a normally open contact, PHC is a normally closed contact, and COM is the common. These terminals are not required to be connected.
[PHE] is the electric preheat operation enable. [PH+] and [PH-] are the preheat set point reset terminals.

Gas Heating

⚠ WARNING

FOR YOUR SAFETY
Read the entire gas heating installation section of this manual before beginning installation of the gas heating section.

If you do not follow these instructions exactly, a fire or explosion may result causing property damage, personal injury, or loss of life.

Verify the unit nameplate agrees with the proper gas supply type and amount.

Gas piping shall be installed in accordance with local codes, or in the absence of local codes, installation shall conform to the current (United States) National Fuel Gas Code ANSI-Z223.1/NFPA 54 or the current (Canada) National Fuel & Propane Installation Code CSA B149.1 or B149.2.

Table 27: 2-6 ton Gas Connections

Cabinet Size	Staging	Capacity (MBH)	Gas Valve QTY	Valve 1 Size	Valve 2 Size
RQ	1, 2, MOD	60	1	1/2”	-
	4, HITD		2	1/2”	1/2”
	1, 2, MOD	100	1	1/2”	-
	4, HITD		2	1/2”	1/2”
	1, 2, MOD	140	1	1/2”	-
	4, HITD		2	1/2”	1/2”
	1, 2, MOD	160	1	1/2”	-
	4, HITD		2	1/2”	1/2”

MOD = Modulating, HITD = High Turndown
1/2” = 12.7 mm

After verifying gas inlet pressure and manifold pressure the service technician shall time the gas flow rate through the gas meter with a stopwatch to verify the gas input rate.

Unit nameplate input rate value has been calculated at the altitude where the unit was shipped. Above 609.6 m (2,000 ft) the input rate is adjusted 4% for every 304.8 m (1,000 ft).

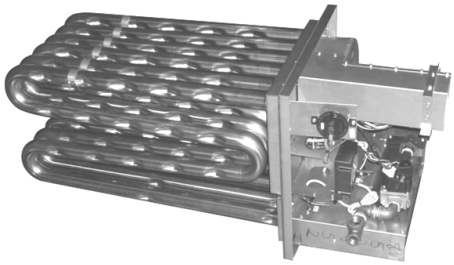

Figure 34 - RQ Series Gas Heat Exchanger

Table 28 – (**Metric**) Natural Gas Maximum Piping Capacities (m^3/hr)
- Specific Gravity = 0.6, Supply Pressure ≤ 3.5 kpa, Pressure Drop = 0.93 mmHg

Pipe Size (mm)	Length of Pipe				
	6.1 m	15.2 m	30.4 m	45.6 m	60.8 m
12.7	3.4	2	1.4	1.1	1
19	7	4.2	2.9	2.4	2
25.4	13	8	5.5	4.5	3.8
31.75	26.9	16.4	11.3	9.2	7.9
38.10	41.3	25.5	17.6	14.2	12.2
50.80	77.9	47.6	32.6	26.9	22.7
63.50	123.2	75.0	52.4	42.5	36.2

Table 29 – (**Imperial**) Natural Gas Maximum Piping Capacities (ft^3/hr)
- Specific Gravity = 0.6, Supply Pressure ≤ 0.5 psi, Pressure Drop = 0.5” w.c.

Pipe Size	Length of Pipe				
	20 ft	50 ft.	100 ft.	150 ft.	200 ft.
1/2”	120	73	50	40	35
3/4”	250	151	103	84	72
1”	465	285	195	160	135
1-1/4”	950	580	400	325	280
1-1/2”	1460	900	620	500	430
2”	2750	1680	1150	950	800
2-1/2”	4350	2650	1850	1500	1280

Table 30 – (**Metric**) Propane (kW) Maximum Piping Capacities
Specific Gravity = 1.52, Supply Pressure = 2.34 kpa., Pressure Drop, 0.93 mmHg

Pipe Size (mm)	Length of Pipe				
	6.1 m	15.2 m	30.4 m	45.6 m	60.8 m
12.7	0.6	0.4	0.3	0.2	0.2
19	1.3	0.8	0.6	0.5	0.4
25.4	2.5	1.5	1.0	0.9	0.7
31.75	438.1	266.7	184.6	149.5	127.5
38.10	672.6	414.7	285.7	230.1	194.9
50.80	1269.0	775.2	530.5	438.1	375.1

Table 31 – (**Imperial**)Propane (kBtu/hr) Maximum Piping Capacities
- Specific Gravity = 1.52, Supply Pressure = 11” w.c., Pressure Drop, 0.5” w.c.

Pipe Size	Length of Pipe				
	20 ft	50 ft.	100 ft.	150 ft.	200 ft.
1/2”	189	114	78	63	55
3/4”	393	237	162	132	112
1”	732	448	307	252	213
1-1/4”	1496	913	630	511	440
1-1/2”	2299	1417	976	787	675
2”	4331	2646	1811	1496	1260

Do not use gas piping smaller than unit gas connections. Natural gas pipe runs longer than 6.1 meters (20 feet) and propane gas pipe that runs longer than 15.2 meters (50 feet)may require a larger supply pipe than the unit connection size. Some utility companies may also require pipe sizes larger than the minimum sizes listed.

Piping Sizing Examples
A 100 ft pipe run is needed for a 1080 MBH natural gas heater. The natural gas has a rating of 1000 Btu/ft^3 and a specific gravity of 0.6 (Obtain these values from the local gas supplier.)

$$1080\,MBH \times \frac{ft^3}{1000\,Btu} = 1080\ \text{ft}^3/\text{hr}$$

From the natural gas maximum capacities table, at 100 ft and 1080 ft^3/hr the required minimum pipe size is 2”.

A 100 ft pipe run is needed for a 270 MBH propane gas heater.

270 *MBH* = 270 kBtu/hr

From the propane gas maximum capacities table, at 100 ft and 270 kBtu/hr the required minimum pipe size is 1”.

Inlet and Manifold Pressures
For natural gas units, the minimum inlet gas pressure to the unit is 11.2 mmHg (6” w.c.) and maximum inlet gas pressure to the unit is 19.6 mmHg (10.5” w.c.) For propane units, the minimum inlet gas pressure to the unit is 20.6 mmHg (11” w.c.) and the maximum inlet gas pressure to the unit is 24.3 mmHg (13” w.c.) A field provided 0.3 cm (1/8”) NPT pressure tap is required to be installed in the piping just upstream of the shutoff valve for test gage connection to allow checking of the gas supply pressure at the unit.

A factory installed pressure tap on the outlet end of the gas valve can be used to verify a manifold pressure of 6.5 mmHg (3.5” w.c.)

for natural gas, or 19.6 mmHg (10.5” w.c.) for propane..

For two stage gas valves, the low stage setting shall be set at 2.1 mmHg (1.1” w.c.) for natural gas, 9.34 mmHg (5.0” w.c.) for propane. For modulating heaters, the safety shut-off valve would be set following the instructions above, then from a provided pressure tap in the gas train immediately preceding the burner manifold the modulating valve is set to maintain a maximum of 6.5 mmHg (3.5” w.c.) and a minimum of .75 mmHg (0.4” w.c).

⚠ CAUTION

Heater shall be disconnected from the gas supply piping during pressure testing of the supply piping system with pressures in excess of 3.5 kpa (½ psi). Gas valves can be damaged if subjected to more than 3.5 kpa (½ psi).

Gas Pressure Regulator & Overpressure Protection Device

A gas pressure regulator shall be installed if natural gas supply pressure to the unit is greater than 19.6 mmHg (10.5” w.c.) and less than 13.8 kpa (2 psi) (103.5 mmHg [55.4” w.c.]) and if propane gas supply pressure is greater than 24.3 mmHg (13” w.c.) and less than 13.8 kpa (2 psi) (103.5 mmHg [55.4” w.c.]). Regulators shall comply with the latest edition of the Standard for Line Pressure Regulators, ANSI Z21.80/CSA 6.22.

Both a gas pressure regulator and overpressure protection device (OPD) shall be installed if gas supply pressure to the unit is greater than 13.8 kpa (2 psi) (103.5 mmHg [55.4” w.c.]) and less than 34.5 kpa (5 psi) (258.57 mmHg [138.4” w.c.]), in compliance with ANSI Z21.80/CSA 6.22. For proper heater operation, pressure to the regulator SHALL NOT be greater than 34.5 kpa (5 psi) (258.57 mmHg [138.4” w.c.]).

Piping Supports

Gas supply piping shall be supported directly at the connection to the unit and at intervals listed in the following table with metal straps, blocks, or hooks. Piping shall not be strained or bent.

Table 32 - Gas Piping Supports (Metric)

Pipe Size	Support Intervals
12.7 to 19.1	Every 1.8 m
19.1 to 25.4	Every 2.4 m
44.5 or Larger (Horizontal)	Every 3 m
31.75 or Larger (Vertical)	Every Floor

Table 33 - Gas Piping Supports (Imperial)

Pipe Size	Support Intervals
1/2” to 3/4”	Every 6 ft
3/4” to 1”	Every 8 ft
1-3/4” or Larger (Horizontal)	Every 10 ft
1-1/4” or Larger (Vertical)	Every Floor

Additional Gas Piping Considerations

Local codes will usually require a field provided and installed manual main shutoff valve and union external to the unit. Main shutoff valve shall be labeled. A drip leg shall be installed near the unit connection to trap sediment and condensate. Pipe joint compounds used on all gas piping connections shall be resistant to liquid petroleum gases. If flexible gas piping to the unit, or in the unit, must be replaced connectors cannot be reused, only new connectors may be used.

Heat exchanger comes equipped with a condensate drain which shall be plumbed to the appropriate drain according to the (United

States) National Fuel Gas Code ANSI-Z223.1/NFPA 54 or the current (Canada) National Fuel & Propane Installation Code CSA B149.1 or B149.2, the International Building Code, and any applicable local and regional codes and regulations.

The condensate drain connection is located next to the gas entry location. The heat exchanger condensate drain connection from the unit is a 16 mm (5/8") barbed nylon elbow connection.

AAON gas fired heat exchangers are designed to be non-condensing. These heat exchangers are mounted downstream of the cooling coils. During the cooling season the ambient air inside the heat exchanger tubes can condense due to cold air being blown over the outside of the tubes. The amount of condensation will vary depending on the ambient air temperature and humidity as well as air temperature over the tubes. This condensation can be drained onto the roof or into any waste drain.

Typically during the heating season the heat exchanger will not make any condensation. However, short-cycling of the heater can prevent the flue gases from reaching temperatures above dew point (about 54.4°C [130ºF]) which can cause condensation in the heat exchanger.

Staged or modulated heat exchangers may produce condensate depending on the firing rate, ambient air temperature and humidity as well as the percentage and temperature of outside air being introduced to the unit. This condensate is generally between a 2.9 and 4 pH level.

Condensation made in the heat exchanger during the heating mode may need to be managed and not just drained onto the roof depending on national and local code requirements and the application of the final user. This condensate can stain the roof and it can cause rust in some cases on metal roofs. It must be determined by a qualified technician if the condensate will damage the roofing material before unit startup.

Below freezing ambient air temperatures during the heating mode can freeze any condensation made in the drain lines. Smaller amounts of condensation may not cause any issues but for larger amounts of condensate and low ambient air temperatures (below freezing for multiple consecutive days) the internal and external drain lines for the unit will need to be heat traced to prevent freezing. Heat traced internal drain lines are required and a factory provided standard feature on the condensate drain with the high turndown modulating gas option.

A condensate neutralizer vessel and connecting tubing can be added to the equipment if required. For below freezing ambient temperature applications the neutralizer, connecting tubing and drain lines will require heat tracing to prevent condensate freezing. It must be determined by a qualified technician if these components are necessary before unit startup.

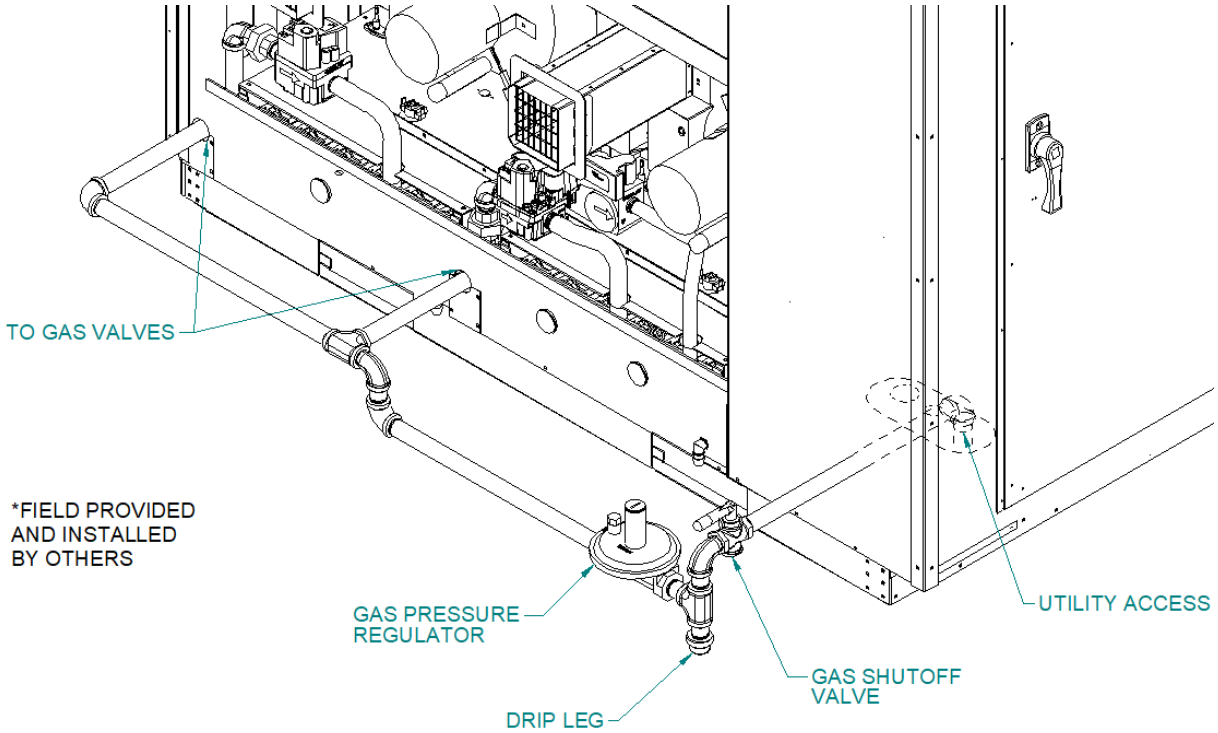

Figure 35 - Example 2-6 ton through the Base Gas Piping
Note: RQ units will only contain one Heat Exchanger

Leak Testing

All components of gas supply system, including manual shut off valves and the piping in the interior of the unit, must be leak tested. At a minimum, the "Bubble Leak Test" must be performed before operating the appliance, as well as, on an annual basis thereafter, if not more frequently. All leak testing must be performed in accordance with this instruction manual as well as in accordance to the National Fuel Gas Code NFPA 54/ANSI-Z223.1, CSA B149.1 (Canada) and local codes as applicable.

Bubble Leak Test

Test is performed using a soap solution leak detector solution. With electrical power to the unit terminated and the gas supply to the unit within the specified pressures provided in this IOM, the solution is sprayed at each threaded connection of the gas supply piping to the unit and internal gas train of the unit. Each connection is observed for bubbles, which indicates leaks in the connection. Joints with bubbles appearing during the check must be inspected for thread engagement and/or damage and tightened as needed.

⚠ DANGER

LEAK CHECK GAS PIPE

The gas pipe in the unit shall be checked for leaks before operation and startup. Unit must not be placed in operation until a leak check has been conducted for all gas piping connections. All connections shall be checked for leaks annually after installation. Gas leaks could result in fire, explosion, or other hazardous situations.

⚠ DANGER

Do not use open flame or other source of ignition for leak testing. Fire or explosion could result causing property damage, personal injury, or death.

⚠ CAUTION

Some soaps used for leak detection can be corrosive to certain metals. Rinse piping thoroughly after leak test has been completed.

All gas fired heat exchangers are completely tested at the factory before shipment. This will remove nearly all of the oils that have been used in the manufacturing process. However, trace amounts may remain. When performing the initial startup at the jobsite, it is highly recommended that people or any other living animals, which may be sensitive to the residual odors or gases, NOT be present in the conditioned space during the startup. In all cases, including the initial factory firing and testing, any of the gases will be under the acceptable level of concentration for human occupancy.

⚠ WARNING

Those sensitive to odors or gases from trace amounts of residual oils shall NOT be present in the conditioned space during the startup of a gas fired installation.

FOR YOUR SAFETY READ BEFORE OPERATING

WARNING: IF YOU DO NOT FOLLOW THESE INSTRUCTIONS EXACTLY, A FIRE OR EXPLOSION MAY RESULT CAUSING PROPERTY DAMAGE, PERSONAL INJURY OR LOSS OF LIFE.

A. This appliance does not have a pilot. It is equipped with a ignition device which automatically lights the burner. Do not try to light the burner by hand.

B. BEFORE OPERATING smell all around the appliance area for gas. Be sure to smell next to the floor because some gas is heavier than air and will settle on the floor.

WHAT TO DO IF YOU SMELL GAS

- Do not try to light any appliance.
- Do not touch any electric switch; do not use any phone in your building.
- Immediately call your gas supplier from a neighbor's phone. Follow the gas supplier's instructions.
- If you cannot reach your gas supplier, call the fire department.

C. Use only your hand to move the on/off switch.

D. Do not use this appliance if any part has been under water. Immediately call a qualified service technician to inspect the appliance and to replace any part of the control system and any gas control which has been under water.

OPERATING INSTRUCTIONS

1. STOP! Read the safety information above this label.
2. Set the thermostat to lowest setting.
3. Turn off all electric power to the appliance.
4. This appliance is equipped with an ignition device which automatically lights the burner. Do not try to light the burner by hand.

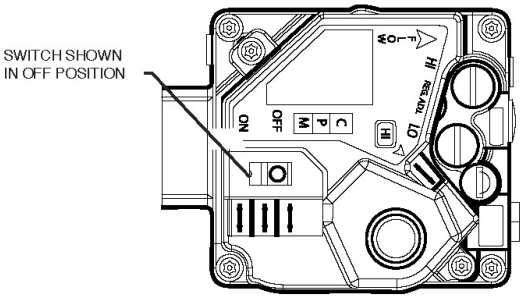

5. Remove control access panel.
6. Move the on/off switch to the "OFF" position.
7. WAIT five (5) minutes to clear out any gas. If you then smell gas, STOP! Follow "B" in the safety information above on this label. If you don't smell gas, go to the next step.
8. Move the on/off switch to the "ON" position.
9. Replace control access panel.
10. Turn on all electric power to the appliance.
11. Set thermostat to desired setting.
12. If the appliance will not operate, follow the instructions "To Turn Off Gas to Appliance" and call your service technician or gas supplier.

TO TURN OFF GAS TO APPLIANCE

1. Set the thermostat to lowest setting.
2. Turn off all electric power to the appliance if service is to be preformed.
3. Remove control access panel.
4. Move the on/off switch to the "OFF" position.
5. Replace control access panel.

Direct Ignition • P72570

Figure 36 - Gas Heater Instructions

⚠ WARNING

Once a year, before the unit is in operation for the heating season, a qualified service technician shall inspect all flue product carrying areas of the furnace and main burners for continued safe operation.

⚠ DANGER

LEAK CHECK GAS PIPE

The gas pipe in the unit must be checked for leaks before operation and startup. Unit must not be placed in operation until a leak check has been conducted for all gas piping connections. All connections shall be checked for leaks annually after installation. Failure to leak check could result in fire, explosion, or other hazardous situations.

Make sure all gas supply lines have been purged of air before turning on the electrical power switch. Turn the gas valve to the on position (see startup instructions). Turn the main electrical power on and set the controls to the heating mode of operation.

The combustion ventilation motor must operate. The control will automatically supply energy to the igniter and the gas valve after the heating call is made.

The flame sensing probe detects the presence of the flame. Should no flame be detected in 10 seconds, the ignition system will recycle. If no flame is detected after 3 tries, ignition system will lockout.

Remove the call for heating. The main gas valves shall be extinguished.

The supply fans are controlled by the ignition system. In the fan "Auto" mode the fan comes on 45 seconds after the flame is proved and goes off 120 seconds after the heating call is removed.

Furnace combustion ventilation air and flue openings shall be checked annually for debris and obstructions. If vent extensions are used they shall meet category III requirements.

This appliance contains a wire screen at the vent outlet. Each heating season, prior to placing the appliance in heat mode maintenance check that no debris or foreign matter has accumulated in the vent outlet. A good practice is to check for debris each time the air filters are changed.

In the event the vent outlet becomes blocked do not attempt to start the appliance in heat mode until the entire vent opening is cleared.

In the event the unit shut down because the vent was blocked a qualified technician or service agency shall monitor the unit prior to re-starting.

The gas burner and heat exchanger should never require cleaning. If cleaning is necessary, this indicates faulty operation of the unit. Cleaning shall only be done by a qualified service agency and only after consultation with an AAON service representative.

If induced draft blower/motor assembly has to be replaced, care shall be taken to provide an airtight seal between the blower housing and the burner box.

Gas Heat Exchanger Removal

⚠ WARNING

Electric shock hazard. Shut off all electrical power to the unit to avoid shock hazard or injury from rotating parts.

Removal
Verify that the unit power has been switched off.

Disconnect all wiring on the heat exchanger.

Shut off all gas valves to the unit.

Remove screws on plate below the door covering the pipes exiting the heat exchanger.

Remove screws around the perimeter of the heat exchanger face plate that connect it to the unit. Only the outermost screws must be removed.

Pull the heat exchanger straight back and out of the unit. It may be necessary to remove some of the control door jambs.

Reinstallation
Ensure that the neoprene isolator is installed around the perimeter of the heat exchanger.

Insert heat exchanger into opening so that the back of the main plate is against the unit bulkhead.

Attach the heat exchanger to the bulkhead using the holes around the perimeter.

Connect wiring per the wiring diagram on the controls compartment door.

Purge gas lines to the gas valves at the unit.

Reattach plate over exterior piping

⚠ DANGER

LEAK CHECK GAS PIPE

The gas pipe in the unit must be checked for leaks before operation and startup. Unit must not be placed in operation until a leak check has been conducted for all gas piping connections. All connections shall be checked for leaks annually after installation. Failure to leak check could result in fire, explosion, or other hazardous situations.

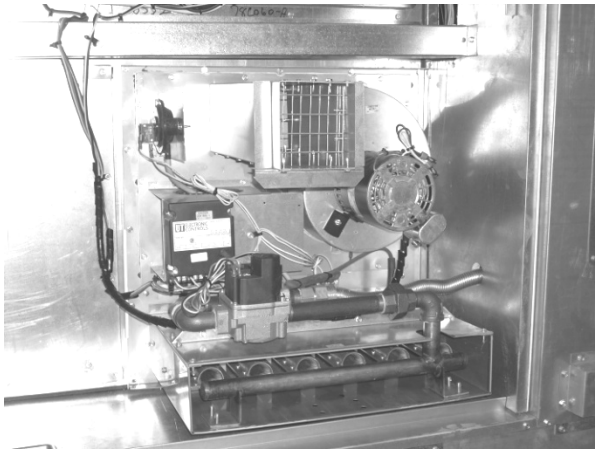

Figure 37 - Gas Heat Exchanger

Phase and Brownout Protection Module

The DPM is a Digital Phase Monitor that monitors line voltages from 200VAC to 240VAC 1ϕ and 200VAC to 600VAC 3ϕ. The DPM is 50/60 Hz self-sensing. DPM must be wired according to unit specific wiring diagram include in the control compartment

When the DPM is connected to the line voltage, it will monitor the line and if everything is within the setup parameters, the output contacts will be activated. If the line voltages fall outside the setup parameters, the output relay will be de-energized after the trip delay.

Once the line voltages recover, the DPM will re-energize the output relay after the restart time delay. All settings and the last 4 faults are retained, even if there is a complete loss of power.

DPM Setup Procedure

With the supply voltage active to the module, you can setup all of the DPM's settings without the line voltage connected.

To change the setpoint parameters use the right arrow key to advance forward through the setpoint parameters and the left arrow to backup if needed. When each parameter is displayed use the up/down keys to change and set the parameter.

After adjustments are made or if no adjustments are made it will take 2 to 4 minutes before the DPM energizes the output relay unless there is an out of tolerance issue with the incoming line voltage.

<u>Recommended Default Set-up</u>

Line Voltage	460VAC, 3Ø
Over & Undervoltage	±10%
Trip Time Delay	5 Seconds
Re-Start Time Delay	2 Minutes
Phase Imbalance	5%

Phase and brownout module may be this type on some products (as seen in the above picture). No setup is needed with this module version, other than checking that the voltage jumper voltage matches the unit voltage

Screens

Manufacturer's Screen

R-K Electronics
DPM v0.0.00

Average Voltage Screen

VAvg	Imb	Hz	
460	0	60	off

Default – the default screen shows the real time voltage detected in each of the 3 phases:

A-B	B-C	C-A	
460	459	461	ON

Voltage Selection Screen (Vertical Format) Default = 460V, 3Ø

200, 1Ø; 208, 1Ø; 220, 1Ø; 230, 1Ø; 240, 1Ø;
200, 3Ø; 208, 3Ø; 220, 3Ø; 230, 3Ø; 240, 3Ø; 380, 3Ø; 415, 3Ø; 440, 3Ø;
460, 3Ø; 480 3Ø; 575, 3Ø; 600, 3Ø;

Over/Under voltage Percentage Screen (Vertical Format) Default = 10%

7% 8% 9% 10% 11% 12% 13% 14% & 15%

Trip Time Delay Screen (Vertical Format) Default = 5 sec

2S, 3S, 4S, 5S, 6S, 27S, 8S, 9S & 10S

Re-Start Time Delay Screen (Vertical Format) Default = 2 sec

Manual, 2S, 3S, 4S, 5S, 6S, 7S, 8S, 9S, 10S, 30S, 1M, 2M, 3M & 4M

Phase Imbalance Percentage Screen (Vertical Format) Default = 5%

3% 4% 5% 6% 7% 8% 9% & 10%

Fault Screen (Vertical Format)

"0" most recent faults, "1" previous fault "2" third oldest fault & "3" fourth oldest fault.

Fault Words:

"Phase a Loss"	(There is no voltage sensed on 3-L1/S)
"Voltage Low"	(Average line voltage is less than selected Undervoltage Percentage)
"Voltage High"	(Average line voltage is more than selected Overvoltage Percentage)
"Imbalance"	(One phase is lower than the average voltage by more than the Imbalance percentage)
"Phase Loss	(One phase is more than 30% below the Line Voltage selection)
"Bad Rotation"	(The phase rotation sequence is reversed)
"Bad Freq"	(Line frequency out of allowable range of 45 to 65 Hz)

Filter Replacement

Monthly air filter inspection is required to maintain optimum unit efficiency.

⚠ WARNING

Electric shock hazard. Shut off all electrical power to the unit to avoid shock hazard or injury from rotating parts.

It is strongly recommended that filter media be replaced monthly. Filters are located upstream of the evaporator coil in the filter and economizer section. Open access door and pull filters straight out to inspect all of the filters. Replace filters with the size indicated on each filter or as shown in the tables below. Arrow on the replacement filters must point towards the blower. (PE = Power Exhaust)

Table 34 - RQ Series 2-6 ton Pre Filters

Feature 6A	Quantity / Size	Type
0	No Pre Filters	
A, E	2 / 20” x 20” x 2”	Pleated, MERV 8
B, E	1 / 16”x20”x1”	Metal Mesh, Outside Air
C	1 / 19.5” x 39” x 5/16”	Lint Screen

Table 35 - RQ Series 2-6 ton Unit Filters

Feature 6B	Quantity / Size	Type
0	2 / 20” x 20” x 2”	Pleated, MERV 8
B	2 / 20” x 20” x 4”	Pleated, MERV 8
C	2 / 20” x 20” x 2”	Permanent Filter Frame - Replaceable Media
F	2 / 20” x 20” x 4”	Pleated, MERV 11
G		Pleated, MERV 13
H		Pleated, MERV 14

Table 36 - RQ Series 2-6 ton Energy Recovery Wheel Filters

Feature 1A	Quantity / Size	Type
F, G, H, J (Energy Recovery Wheel)	1 / 24” x 12” x 2”	Pleated, MERV 8
	With Energy Recovery Exhaust Air Filters, Feature 6A - D, F, G, H OA - 1 / 24” x 12” x 2” EA - 1 / 24” x 12” x 2”	
Q, R, S, T, U, V, W, Y (Fixed Plate Energy Recovery)	1 / 24” x 24” x 2”	
	With Energy Recovery Exhaust Air Filters, Feature 6A - D, F, G, H EA - 1 / 24” x 24” x 2” EA - 1 / 24” x 24” x 2”	

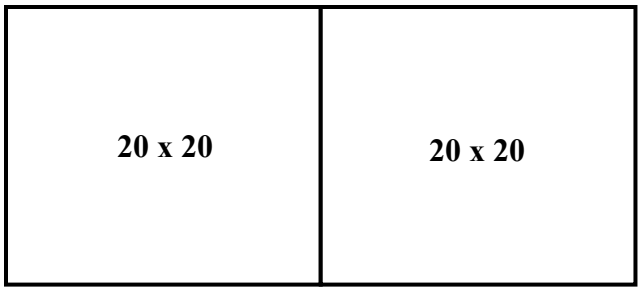

Figure 38 - RQ Series 2-6 ton Standard Filter Layout
(Viewed from the Upstream Side of the Cooling Coil)

Filter Conversion Table

Inches	Centimeters
[16 x 20 x 1]	[40.6 x 50.8 x 2.5]
[19.5 x 39 x 5/16]	[49.5 x 99 x 0.8]
[20 x 20 x 2]	[50.8 x 50.8 x 5.1]
[20 x 20 x 4]	[50.8 x 50.8 x 10.2]
[24 x 12 x 2]	[61 x 30.5 x 5.1]
[24 x 24 x 2]	[61 x 61 x 5.1]

Replacement Parts
Parts for AAON equipment may be obtained from your local AAON representative. Reference the unit serial number and part number when ordering parts.

AAON
Warranty, Service and Parts Department
2425 S. Yukon Ave.
Tulsa, OK 74107
Ph: 918-382-6450
techsupport@AAON.com
www.AAON.com

Note: Before calling, technician must have model and serial number of the unit available for the service department to help answer questions regarding the unit.

Warranty: Refer to the Limited Warranty Certificate for the unit warranty details. Contact your AAON representative for a unit specific copy of the certificate for your serial number.

Limited Warranty Certificate

GENERAL CONDITIONS
AAON, Inc. (hereinafter referred to as "AAON") warrants this AAON equipment, as identified hereon, to be free of defects in material and workmanship under normal use, service, and maintenance. Our obligations under this warranty must be limited to repairing or replacing the defective part, or parts, which in our judgment show evidence of such defects. AAON is not liable for labor charges and other costs incurred for removing, shipping, handling or transporting defective part, or parts, or for shipping, handling, transporting, or installing repaired or replacement part, or parts.

The limited warranty is effective one (1) year from date of **original installation**, or eighteen (18) months from date of original shipment from the factory, whichever occurs first and covers all parts and components in this AAON equipment excluding air filters, belts, refrigerant moisture driers, and lost refrigerant, which are not included in any part of this limited warranty. The replacement part, or parts, assume only the unused portion of the original limited warranty and are shipped f.o.b. from the factory and freight prepaid by the factory.

The limited warranty is effective for products manufactured at the Tulsa, Oklahoma or Longview, Texas facility.

THIS LIMITED WARRANTY ONLY APPLIES WHEN THE **ORIGINAL MODEL NUMBER AND SERIAL NUMBER** OF THE AAON UNIT ARE GIVEN AT TIME OF REQUEST FOR REPLACEMENT PART, OR PARTS. DEFECTIVE PART, OR PARTS, MUST BE RETURNED **PREPAID**, WITH ITS ASSIGNED RETURN MATERIAL TAG, WITHIN FOURTEEN (14) DAYS OF RECEIPT OF THE REPLACEMENT PART, OR PARTS.

EXTENDED LIMITED WARRANTY ON COMPRESSORS INCLUDED IN SINGLE PACKAGE EQUIPMENT (NOT INCLUDING CHILLERS OR WH/WV); OPTIONAL ON OTHER EQUIPMENT
For the second through the fifth year from date of **shipment**, we further agree to repair or replace the fully hermetic compressor, at our option, for the **original purchase-user only**. The repaired or replacement fully hermetic compressor will be supplied f.o.b. the factory, freight **prepaid and add**, providing the defective fully hermetic compressor is returned **prepaid by the customer**, and is proven to be inoperative due to defects in materials or workmanship. This extended limited warranty covers **only** the fully hermetic compressor and **does not include** any labor charges, or other additional costs incurred for removing, shipping, handling, transporting, or replacing the defective fully hermetic compressor. It also **does not include** additional costs incurred for shipping, handling, or transporting of electric controls such as relays, capacitors, pressure controls, or fan-motor assemblies, condensers, receivers, etc, which carry the standard **one-year limited warranty**.

EXTENDED LIMITED WARRANTY OF WH/WV PRODUCTS
The WH/WV limited warranty is effective five (5) years from date of original installation. If installation date cannot be verified, limited warranty is effective five (5) years from date of equipment manufacture at the factory. Warranty covers all parts and components, including compressors, in this AAON equipment except those excluded in the general conditions.

EXTENDED LIMITED WARRANTY OF RQ PRODUCTS
The RQ limited warranty is effective two (2) years from date of original **shipment** from the factory and covers all parts and components in this AAON equipment except those excluded in the general conditions.

FOR OPTIONAL TWO YEAR EXTENDED LIMITED WARRANTY OF RN PRODUCTS
The limited warranty is effective two (2) years from date of original **shipment** from the factory and covers all parts and components in this AAON equipment except those excluded in the general conditions.

FOR OPTIONAL FIVE YEAR EXTENDED LIMITED WARRANTY OF RN or RQ PRODUCTS
The limited warranty is effective five (5) years from date of original **shipment** from the factory and covers all parts and components in this AAON equipment except those excluded in the general conditions.

FOR OPTIONAL TEN YEAR EXTENDED LIMITED WARRANTY OF RN or RQ PRODUCTS
The limited warranty is effective ten (10) years from date of original **shipment** from the factory and covers all parts and components in this AAON equipment except those excluded in the general conditions.

FOR OPTIONAL FIVE YEAR EXTENDED LIMITED WARRANTY OF RN OR RQ ECONOMIZER WITH FAULT DETECTION AND DIAGNOSTICS
For the second through fifth year from date of shipment, we further warrant the economizer damper assembly against failure due to defects in materials and workmanship for the original purchaser-user only.

EXTENDED LIMITED WARRANTY OF GAS FIRED HEAT EXCHANGERS

FOR RQ OR RN ALUMINIZED STEEL HEAT EXCHANGERS
For the second through the fifteenth year from date of **shipment**, we further warrant the steel heat exchanger against failure due to defects in materials and workmanship for the **original purchaser-user only**.

FOR RQ, RN, OR RZ STAINLESS STEEL HEAT EXCHANGERS
For the second through the twenty-fifth year from date of **shipment**, we further warrant the stainless steel heat exchanger against failure due to defects in materials and workmanship for the **original purchaser-user only**.

FOR RL SERIES HEAT EXHANGERS
For the second through the tenth year from date of original installation, we further warrant the steel heat exchanger against failure due to defects in materials and workmanship for the original purchaser-user only, in accordance with the following: For the first five (5) years from date of shipment, we agree to repair or replace the heat exchanger, at our option, for the original purchaser-user only; during the sixth year, we will charge 50% of the current trade price for repaired or replacement steel heat exchanger, as the case may be, during the seventh year, 60%, during the eighth year, 70% during the ninth year, 80% and during the tenth year, 90%.

In all cases, the repaired or replacement heat exchanger will be supplied f.o.b. our factory, freight prepaid, providing the defective heat exchanger is returned **prepaid**, and if it is proved to be inoperative due to defects in materials and workmanship. This extended limited warranty covers **only** the heat exchanger and **does not include** labor charges, or other costs incurred for removing, shipping, handling, transporting, or installing repaired replacement heat exchanger. This extend limited warranty **does not apply** where the furnace has been operated in an atmosphere contaminated by chlorine, fluorine, or any other damaging chemical compounds.

FOR OPTIONAL FIVE YEAR EXTENDED LIMITED WARRANTY OF COIL COATING
For the second through fifth year from date of shipment, we further warrant the coating of e-coated coils on the equipment against failure due to defects in materials and workmanship for the original purchaser-user only. Coil cleaning, maintenance, and record keeping must be followed according to the unit Installation, Operation and Maintenance Manual to maintain warranty.

SAMPLE

Limited Warranty Certificate

OTHER CONDITIONS

This warranty **does not cover** any AAON unit or part thereof which has been subject to accident, negligence, damages in transit, misuse or abuse, **or which has been tampered with or altered in any way**, or which has **not** been installed operated serviced and maintained in accordance with our instructions, or which has been installed outside of the Continental United States or Canada, or on which the serial number or identification number has been altered defaced, or removed. AAON will not be responsible for failure of the unit to start due to voltage conditions, blown fuses, open circuit breakers, or other damages due to the inadequacy or interruption of electric service.

This warranty **does not cover** equipment containing a water-to-refrigerant heat exchanger for any damage resulting from freezing, fouling, corrosion or clogging.

AAON must not be liable for any default or delay in performance hereunder, caused by a contingency beyond its control, including governmental restrictions or restraint, strikes, short or reduced supply of raw materials or parts, floods, winds, fire, lightning strikes, or any other acts of God.

DISCLAIMERS OF WARRANTIES

THIS WARRANTY IS EXCLUSIVE AND IS IN LIEU OF ANY WARRANTY OF MERCHANTABILITY, FITNESS FOR A PARTICULAR PURPOSE OR OTHER WARRANTY OF QUALITY, WHETHER EXPRESS OR IMPLIED, EXCEPT OF TITLE AND AGAINST PATENT INFRINGEMENT, CORRECTION OF NON-CONFORMITIES ARE LIMITED TO REPAIR OR REPLACEMENT OF THE DEFECTIVE PART OR PARTS, AT SELLER'S OPTION, WHICH MUST CONSTITUTE FULFILLMENT OF ALL TORT OR OTHERWISE IT IS EXPRESSLY UNDERSTOOD THAT AAON MUST NOT BE LIABLE FOR ANY CONSEQUENTIAL OR INCIDENTAL DAMAGES. AAON MUST NOT UNDER ANY CIRCUMSTANCES BE LIABLE FOR SPECIAL, INCIDENTAL OR CONSEQUENTIAL DAMAGES, SUCH AS, BUT NOT LIMITED TO DAMAGES OR LOSS OF OTHER PROPERTY OR EQUIPMENT, LOSS OF PROFITS OR REVENUE, COST OF CAPITAL, COST OF PURCHASED OR REPLACEMENT GOODS, OR CLAIMS OF BUYER OR USER FOR SERVICE INTERRUPTIONS. THE REMEDIES OF THE BUYER SET FORTH HEREIN ARE EXCLUSIVE, AND THE LIABILITY OF AAON WITH RESPECT TO ANY CONTRACT, OR ANYTHING DONE IN CONNECTION THEREWITH SUCH AS THE PERFORMANCE OR BREACH THEREFORE, OR FROM THE MANUFACTURE, SALE, DELIVERY, RESALE, INSTALLATION, OR USE OF ANY GOODS COVERED BY OR FURNISHED UNDER THIS CONTRACT WHETHER ARISING OUT OF CONTRACT, NEGLIGENCE, STRICT TORT, OR UNDER ANY WARRANTY, OR OTHERWISE, MUST NOT EXCEPT AS EXPRESSLY PROVIDED HEREIN, EXCEED THE PRICE OF THE GOODS UPON WHICH SUCH LIABILITY IS BASED.

WITH RESPECT TO THE GOODS SOLD, THE BUYER HEREBY WAIVES ALL LIABILITY ARISING FROM STATUTE, LAW, STRICT LIABILITY IN TORT, OR OTHERWISE, INCLUDING WITHOUT LIMITATION ANY OBLIGATION OF AAON WITH RESPECT TO CONSEQUENTIAL OR INCIDENTAL DAMAGES AND WHETHER OR NOT OCCASIONED BY AAON NEGLIGENCE. TIME LIMIT ON COMMENCING LEGAL ACTIONS: AN ACTION FOR BREACH OF THIS CONTRACT FOR GOOD SOLD OR ANY OTHER ACTION OTHERWISE ARISING OUT OF THIS CONTRACT, MUST BE COMMENCED WITHIN ONE (1) YEAR FROM THE DATE, THE RIGHT, CLAIM, DEMAND OR CAUSE OF ACTION MUST FIRST OCCUR, OR BE BARRED FOREVER.

SEVERABILITY

IF ANY PROVISION OR CAUSE OF THIS CONTRACT OR APPLICATION THEREOF TO ANY PERSON OR CIRCUMSTANCES IS HELD INVALID OR UNCONSCIONABLE SUCH INVALIDITY OR UNCONSCIONABILITY MUST NOT AFFECT OTHER PROVISIONS OR APPLICATIONS OF THE CONTRACT WHICH CAN BE GIVEN EFFECT WITHOUT THE INVALID OR UNCONSCIONABLE PROVISIONS OF THE CONTRACT ARE DECLARED BE SEVERABLE.

EQUIPMENT INFORMATION (REQUIRED)

Job Name: Click or tap here to

Sales Order Number: Click or tap here to enter text.

Unit Tag: Click or tap here to enter text

Date of Shipment: Click or tap here to enter text.

Serial Number: Click or tap here to enter text.

Unit Model Number: Click or tap here to enter text.

SAMPLE

Appendix A - Heat Exchanger Corrosion Resistance

The resistance guide provides the corrosion resistance of stainless steel type AISI 316 and pure Copper (99.9%) in water, to a number of important chemical factors. The actual corrosion is a very complex process influenced by many different factors in combination.

Explanations: + Good resistance under normal conditions
0 Corrosion problems may occur especially when more factors are valued 0
- Use is not recommended

Water Containing	Concentration (mg/l or ppm)	Time Limits - Analyze Before	AISI 316	SMO 254	Copper Alloy	Nickel Alloy
Alkalinity (HCO_3^-)	< 70	Within 24 Hours	+	+	0	+
	70-300		+	+	+	+
	> 300		+	+	0/+	+
Sulfate (SO_4^{2-})	< 70	No Limit	+	+	+	+
	70-300		+	+	0/-	+
	> 300		0	0	-	+
HCO_3^-/ SO_4^{2-}	> 1.0	No Limit	+	+	+	+
	< 1.0		+	+	0/-	+
Electrical Conductivity	< 10µS/cm	No Limit	+	+	0	+
	10-500 µS/cm		+	+	+	+
	> 500 µS/cm		+	+	0	+
pH	< 6.0	Within 24 Hours	0	0	0	+
	6.0-7.5		0/+	+	0	+
	7.5-9.0		+	+	+	+
	> 9.0		+	+	0	+
Ammonium (NH_4^+)	< 2	Within 24 Hours	+	+	+	+
	2-20		+	+	0	+
	> 20		+	+	-	+
Chlorides (Cl^-)*	< 300	No Limit	+	+	+	+
	> 300		0	+	0/+	+
Free Chlorine (Cl_2)	< 1	Within 5 Hours	+	+	+	+
	1-5		+	+	0	+
	> 5		0/+	+	0/-	+
Hydrogen Sulfide (H_2S)	< 0.05	No Limit	+	+	+	+
	> 0.05		+	+	0/-	+
Free (aggressive) Carbon Dioxide (CO_2)	< 5	No Limit	+	+	+	+
	5-20		+	+	0	+
	> 20		+	+	-	+

*See Chloride Content Table

Water Containing	Concentration (mg/l or ppm)	Time Limits - Analyze Before	AISI 316	SMO 254	Copper Alloy	Nickel Alloy
Total Hardness (°dH)	4.0-8.5	No Limit	+	+	+	+
Nitrate (NO_3)	< 100	No Limit	+	+	+	+
	> 100		+	+	0	+
Iron (Fe)	< 0.2	No Limit	+	+	+	+
	> 0.2		+	+	0	+
Aluminum (Al)	< 0.2	No Limit	+	+	+	+
	> 0.2		+	+	0	+
Manganese (Mn)	< 0.1	No Limit	+	+	+	+
	> 0.1		+	+	0	+

Chloride Content

Chloride Content	Maximum Temperature			
	60°C (140°F)	80°C (176°F)	120°C (248°F)	130°C (266°F)
= 10 ppm	SS 304	SS 304	SS 304	SS 316
= 25 ppm	SS 304	SS 304	SS 316	SS 316
= 50 ppm	SS 304	SS 316	SS 316	Ti / SMO 254
= 80 ppm	SS 316	SS 316	SS 316	Ti / SMO 254
= 150 ppm	SS 316	SS 316	Ti / SMO 254	Ti / SMO 254
= 300 ppm	SS 316	Ti / SMO 254	Ti / SMO 254	Ti / SMO 254
> 300 ppm	Ti / SMO 254	Ti / SMO 254	Ti / SMO 254	Ti / SMO 254

Appendix B - Thermistor Temperature vs. Resistance Values

Deg C	Deg F	Resistance (kOhms)
-40	-40	2889.6
-35	-31	2087.22
-30	-22	1522.20
-25	-13	1121.44
-20	-4	834.72
-15	5	627.28
-10	14	475.74
-5	23	363.99
0	32	280.82
5	41	218.41
10	50	171.17
15	59	135.14
20	68	107.44
25	77	86.00
30	86	69.28
35	95	56.16
40	104	45.81
45	113	37.58
50	122	30.99
55	131	25.68
60	140	21.40
65	149	17.91

Deg C	Deg F	Resistance (kOhms)
70	158	15.07
75	167	12.73
80	176	10.79
85	185	9.20
90	194	7.87
95	203	6.77
100	212	5.85
105	221	5.09
110	230	4.45
115	239	3.87
120	248	3.35
125	257	2.92
130	266	2.58
135	275	2.28
140	284	2.02
145	293	1.80
150	302	1.59
155	311	1.39
160	320	1.25
165	329	1.12
170	338	1.01
175	347	0.92
180	356	0.83

RQ Series Startup Form

Job Name:_____ Date:_____

Address:_____

_____

Model Number:_____

Serial Number:_____ Tag:_____

Startup Contractor:_____

Contractor Address:_____

_____ Phone:_____

Pre Startup Checklist

Installing contractor must verify the following items.	
1. Is there any visible shipping damage?	☐ Yes ☐ No
2. Is the unit level?	☐ Yes ☐ No
3. Are the unit clearances adequate for service and operation?	☐ Yes ☐ No
4. Do all access doors open freely and are the handles operational?	☐ Yes ☐ No
5. Have all electrical connections been tested for tightness?	☐ Yes ☐ No
6. Does the electrical service correspond to the unit nameplate?	☐ Yes ☐ No
7. On 208/230V units, has transformer tap been checked?	☐ Yes ☐ No
8. Has overcurrent protection been installed to match the unit nameplate requirement?	☐ Yes ☐ No
9. Have all set screws on the fans been tightened?	☐ Yes ☐ No
10. Do all fans rotate freely?	☐ Yes ☐ No
11. Does any field water piping to the unit appear to be correct per design parameters?	☐ Yes ☐ No
12. Is all copper tubing isolated so that it does not rub?	☐ Yes ☐ No
13. Has outside air rain hood been opened?	☐ Yes ☐ No
14. Have the damper assemblies been inspected?	☐ Yes ☐ No
15. Are air filters installed with proper orientation?	☐ Yes ☐ No
16. Have condensate drain and p-trap been connected?	☐ Yes ☐ No
17. Are ventilation and exhaust openings unobstructed?	☐ Yes ☐ No
18. Are markings, decals, and warnings on unit clearly visible?	☐ Yes ☐ No
19. Are all damaged or illegible markings and warnings replaced?	☐ Yes ☐ No

Ambient Temperature

Ambient Dry Bulb Temperature _____°C/°F	Ambient Wet Bulb Temperature _____°C/°F

Supply Fan Assembly

Alignment ☐		Check Rotation ☐		Nameplate Amps_____
Number	hp	L1 Volts/Amps	L2 Volts/Amps	L3 Volts/Amps
1				
Band Size_____			VAV Controls_____	
VFD Frequency_____				

Energy Recovery Wheel Assembly

Wheel Spins Freely ☐		Check Rotation ☐		FLA _____
Number	hp	L1 Volts/Amps	L2 Volts/Amps	L3 Volts/Amps
1				

Power Exhaust Fan Assembly

Alignment ☐		Check Rotation ☐		Nameplate Amps_____
Number	hp	L1 Volts/Amps	L2 Volts/Amps	L3 Volts/Amps
1				
Band Size_____				
VFD Frequency_____				

Outside Air/Economizer Dampers

Operation Check ☐	Damper Wiring Check ☐	Gears Check ☐
Damper Actuator Type:_____		
Economizer Changeover Type and Operation:_____		

Unit Configuration

Water-Cooled Condenser ☐	Air-Cooled Condenser ☐
No Water Leaks ☐	Condenser Safety Check ☐
Water Flow _____ gpm	
Water Inlet Temperature _____°C/°F	Water Outlet Temperature _____°C/°F

Compressors/DX Cooling

Check Rotation ☐					
Number	L1 Volts/Amps	L2 Volts/Amps	L3 Volts/Amps	Head Pressure PSIG	Suction Pressure PSIG
1 - Full Capacity					
1 - Reduced Capacity					

Refrigeration System 1 Full Capacity - Cooling Mode

	Pressure	Saturated Temperature	Line Temperature	Sub-cooling	Superheat
Discharge				N/A	N/A
Suction				N/A	
Liquid					N/A

Refrigeration System 1 Reduced Capacity - Cooling Mode

	Pressure	Saturated Temperature	Line Temperature	Sub-cooling	Superheat
Discharge				N/A	N/A
Suction				N/A	
Liquid					N/A

Refrigeration System 1 Full Capacity - Heating Mode (Heat Pump Only)

	Pressure	Saturated Temperature	Line Temperature	Sub-cooling	Superheat
Discharge				N/A	N/A
Suction				N/A	
Liquid					N/A

Refrigeration System 1 Reduced Capacity - Heating Mode (Heat Pump Only)

	Pressure	Saturated Temperature	Line Temperature	Sub-cooling	Superheat
Discharge				N/A	N/A
Suction				N/A	
Liquid					N/A

Air-Cooled Condenser Fans

Alignment ☐		Check Rotation ☐		Nameplate Amps_____
Number	hp	L1 Volts/Amps	L2 Volts/Amps	L3 Volts/Amps
1				

Water/Glycol System

1. Has the entire system been flushed and pressure checked?	☐Yes ☐No
2. Has the entire system been filled with fluid?	☐Yes ☐No
3. Has air been bled from the heat exchangers and piping?	☐Yes ☐No
4. Is the glycol the proper type and concentration (N/A if water)?	☐Yes ☐No
5. Is there a minimum load of 50% of the design load?	☐Yes ☐No
6. Has the water piping been insulated?	☐Yes ☐No
7. What is the freeze point of the glycol (N/A if water)? _____	

Gas Heating

Natural Gas ☐	Propane ☐	Purge Air from Lines ☐	Verify Pilot Spark ☐
Stage	Manifold Pressure (w.c.) inlet	Manifold Pressure (w.c.) outlet	
1			
2			
3			
4			

Electric Heating

Stages_____	Limit Lockout ☐	Aux. Limit Lockout ☐	
Stage	Amps	Stage	Amps
1		3	
2		4	

Electric Preheating

Limit Lockout ☐		Aux. Limit Lockout ☐	
Outside Air Temperature Setpoint _____°C/°F			
Preheat Leaving Air Temperature Setpoint _____°C/°F			
Stage	Amps	Stage	Amps
1		3	
2		4	

Maintenance Log

This log must be kept with the unit. It is the responsibility of the owner and/or maintenance/service contractor to document any service, repair or adjustments. AAON Service and Warranty Departments are available to advise and provide phone help for proper operation and replacement parts. The responsibility for proper startup, maintenance and servicing of the equipment falls to the owner and qualified licensed technician.

Entry Date	Action Taken	Name/Tel.

Maintenance Log (E-Coated Coil)

AAON E-COATED COIL MAINTENANCE RECORD

Installation Site _____ Installation Date _____
Unit Model # _____ Unit Location _____
Unit Serial # _____ Customer _____

Year 20____	Ambient Temp (°F)	Surface Debris Removed	Coil Cleaned	Approved Cleaner Used	Potable Water Backwash Rinse	Potable Water Frontwash Rinse	Chlorides Removed	Comments
Jan								
Feb								
Mar								
Apr								
May								
Jun								
Jul								
Aug								
Sep								
Oct								
Nov								
Dec								

The following cleaning agents have been approved for use on AAON E-Coated Coils to remove mold, mildew, dust, soot, greasy residue, lint and similar particulate without harming the coated surfaces.

CLEANING AGENT	RESELLER	PART NUMBER
GulfClean ™ Coil Cleaner or Enviro-Coil Cleaner	Rectorseal 2601 Spenwick Drive, Houston, Texas 77055 (P): 713-263-8001	G074480 / 80406 or V82540
GulfClean Salt Reducer™	" "	G074490 / 80408

RECOMMENDED CHLORIDE REMOVER
Rectorseal 2601 Spenwick Drive, Houston, Texas 77055 (P): 713-263-8001

Literature Change History

March 2019
Updated *Feature 9: Refrigeration Accessories* options.

April 2019
Added Table 2 - Nameplate Voltage Markings.

July 2019
Updated *Feature 21* descriptions.

March 2020
Updated Refrigerant-to-Water Heat exchanger section. Updated the ERW filter sizes.

June 2020
Updated Energy Recovery section. Updated coil cleaning instructions. Updated nameplate voltage table and tolerances.

January 2021
Updated compressor cycling warning from 5 minute min off time to 3 minute min off time. Added Parallel Modulating Hot Gas Reheat Microchannel Coil options to Feature 8, added Condenser Coil Screen option to Feature 17. Added kAIC options to Feature 18. Require that p-trap be field provided and installed. Added Enviro-Coil cleaner to E-coating cleaning section.

June 2021
Reorganized the sections. Added the AAON PBO. Updated the Acceptable Refrigeration Circuit Values table and added the Acceptable Microchannel Air-Cooled Condenser Coil Liquid Sub-Cooling Values table. Added a note about drain pan connections are 1" MPT fitting.

June 2023
Changed the LEAK CHECK GAS PIPE Danger wording from must to shall. Updated the RQ Series 2-6 ton Pre Filters Table. Updated gas heat section with information in regards to gas manifold change. Updated Feature 15 with gas manifold piping. First Revision (A) for this change.

November 2023
Added New UL 60335 tables and standard. Added 35 and 65 KAIC tables. Add Min and Max Water temps and pressures table. Added metric and imperial versions of 410A Add new warning labels. Updated Feature string. Added metric conversions to all units in the IOM. Added Draw-Through Coils section with static pressure tables.

Copyright © AAON, all rights reserved throughout the world.
AAON® and AAONAIRE® are registered trademarks of AAON, Inc., Tulsa, OK.

Copyright © AAON, all rights reserved throughout the world.
AAON® and AAONAIRE® are registered trademarks of AAON, Inc., Tulsa, OK.

AAON
2425 South Yukon Ave.
Tulsa, OK 74107-2728
www.AAON.com

RQ Series
Installation, Operation & Maintenance
V03850 · Rev. A · 240423

Factory Technical Support: (918) 382-6450

Note: Before calling Technical Support, please have the model and serial number of the unit available.

Parts: For replacement parts please contact your local AAON Representative.

It is the intent of AAON to provide accurate and current product information. However, in the interest of product improvement, AAON reserves the right to change pricing, specifications, and/or design of its product without notice, obligation, or liability.

Copyright © AAON, all rights reserved throughout the world.
AAON® and AAONAIRE® are registered trademarks of AAON, Inc., Tulsa, OK.